# Operator's Manual GT-225i Grass Trimmer

**⚠ WARNING**

***The engine exhaust from this product contains chemicals known to the State of California to cause cancer, birth defects, or other reproductive harm.***

**⚠ WARNING**

***Read and understand all provided literature before use. Failure to do so could result in serious injury.***

Note: This product complies with CAN ICES-2/NMB-2.

X7732275306

© 11/23 ECHO Incorporated

# TABLE OF CONTENTS

Introduction ..... 3
Servicing Information ..... 3
Parts and Serial Number ..... 3
Service ..... 4
ECHO Consumer Product Support ..... 4
Product Registration ..... 4
Additional Literature ..... 4
Safety ..... 5
Manual Safety Symbols and Important Information ..... 5
International Symbols ..... 6
Personal Condition and Safety Equipment ..... 8
Equipment ..... 13
Emission Control (Exhaust & Evaporative) ..... 15
EPA Emissions Control Information ..... 15
Description ..... 16
Contents ..... 17
Assembly ..... 18
Shield Installation ..... 18
Nylon Line Installation ..... 18
Support Handle ..... 19
Operation ..... 20
Fuel ..... 20
Starting Cold Engine ..... 24
Starting Warm Engine ..... 25
Stopping Engine ..... 26
Applications ..... 27
Operating Techniques - Nylon Line Head ..... 27
Maintenance ..... 28
Skill Levels ..... 28
Maintenance Intervals ..... 29
Air Filter ..... 30
Fuel Filter ..... 31
Spark Plug ..... 32
Cooling System ..... 32
Exhaust System ..... 34
Carburetor Adjustment ..... 35
Lubrication ..... 37
Troubleshooting ..... 38
Storage ..... 40
Long Term Storage (Over 30 Days) ..... 40
Specifications ..... 41
Specifications ..... 42
Product Registration ..... 44


© 11/23 ECHO Incorporated

# INTRODUCTION

Specifications, descriptions, and illustrative material in this literature are as accurate as possible. Specifications are subject to change without notice. Illustrations might include optional equipment and accessories, and might not include all standard equipment. Your equipment might appear slightly different than pictured equipment.

Read and understand all provided literature. Literature contains specifications and information for safety, operation, maintenance, storage, and assembly specific to this product. Scan QR codes for more information.

For additional literature, including safety manuals where applicable, or questions regarding terms used in this manual, visit:

https://www.echo-usa.com/manuals

OR

https://www.shindaiwa-usa.com/manuals

# SERVICING INFORMATION

## Parts and Serial Number

Genuine ECHO parts and assemblies for your ECHO products are available only from an Authorized ECHO Dealer. When you do need to buy parts, always have the model number and serial number of the unit with you. For future reference write them in the space provided below.

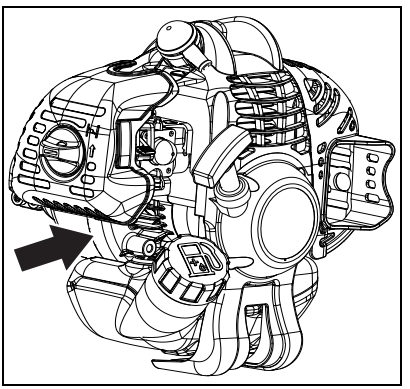

Model No. _____ Serial No. _____


© 11/23 ECHO Incorporated

## Service

Service of this product during the warranty period must be performed by an Authorized ECHO Service Dealer. For the name and address of the Authorized ECHO Service Dealer nearest you, ask your retailer or call: 1-800-432-ECHO (3246). Dealer information is also available on our Web Site www.echo-usa.com. When presenting your unit for Warranty service/ repairs, proof of purchase is required.

## ECHO Consumer Product Support

If you require assistance or have questions concerning the application, operation, or maintenance of this product, call the ECHO Consumer Product Support Department at 1-800-432-ECHO (3246) from 8:00 a.m. to 5:00 p.m. (Central Standard Time) Monday through Friday. Before calling, please know the model and serial number of your unit.

## Product Registration

Register your ECHO equipment online at www.echo-usa.com or by filling out the product registration sheet included in this manual. Registering your product confirms warranty coverage and provides a direct link to ECHO if we find it necessary to contact you.

## Additional Literature

In addition to finding information online, information is available from your Authorized ECHO Service Dealer, or by contacting ECHO Incorporated, 400 Oakwood Road, Lake Zurich, IL 60047, 1-800-432-ECHO (3246).


© 11/23 ECHO Incorporated

# SAFETY

## Manual Safety Symbols and Important Information

Throughout this manual and on the product itself, you will find safety alerts and helpful, informational messages preceded by symbols or key words. The following is an explanation of those symbols and key words and what they mean to you.

**DANGER**

***The safety alert symbol accompanied by the word "DANGER" calls attention to an act or condition which WILL lead to serious personal injury or death if not avoided.***

**WARNING**

***The safety alert symbol accompanied by the word "WARNING" calls attention to an act or condition which CAN lead to serious personal injury or death if not avoided.***

**CAUTION**

***The safety alert symbol accompanied by the word "CAUTION" calls attention to an act or condition which might lead to minor or moderate personal injury if not avoided.***

***NOTICE***

*The enclosed message provides information necessary for the protection of the unit.*

Note: This enclosed message provides tips for use, care and maintenance of the unit.

CIRCLE AND SLASH SYMBOL
This symbol means the specific action shown is prohibited. Ignoring these prohibitions can result in serious or fatal injury.


© 11/23 ECHO Incorporated

## International Symbols

| Symbol | Description | Symbol | Description |
|---|---|---|---|
| | Warning, See Operator's Manual | H | Carburetor Adjustment - High Speed Mixture |
| | Wear Eye, Ear and Head Protection | T | Carburetor Adjustment - Idle Speed |
| | Wear Hand and Foot Protection | L | Carburetor Adjustment - Low Speed Mixture |
| | Safety/Alert | STOP | Emergency Stop |
| | Hot Surface | | Fuel and Oil Mixture |
| | Do not operate without guards and shields in place. | | Do not use blades. String line only. |
| | Avoid all power lines. This unit is not insulated against electrical current. | | Plan retreat path from falling objects |
| | DO NOT Allow Flames or Sparks Near Fuel | Ignition ON I OFF O | Ignition ON / OFF |
| | DO NOT Smoke Near Fuel | | Purge Bulb |


© 11/23 ECHO Incorporated

| Symbol | Description | Symbol | Description |
|---|---|---|---|
| | Choke Control “RUN” Position (Choke Open) | | Choke Control “COLD START” Position (Choke Closed) |
| | Keep Bystanders and Helpers Away 15 m (50 ft.). | | Rotating Cutting Attachment |
| | Do not exceed 10,000 RPM | | Wear slip resistant footwear |

Note: Not all symbols will appear on your unit.

© 11/23 ECHO Incorporated

## Personal Condition and Safety Equipment

**WARNING**

***Cancer and Reproductive Harm***
***www.P65Warnings.ca.gov***

**WARNING**

***The muffler or catalytic muffler and surrounding cover may become extremely hot. Always keep clear of exhaust and muffler area, otherwise serious personal injury might occur.***

**WARNING**

***Users of this product risk injury to themselves and others if the unit is used improperly and/or safety precautions are not followed. Proper clothing and safety gear must be worn when operating unit.***

### Physical Condition

Your judgment and physical dexterity may not be good:

- If you are tired or sick
- If you are taking medication
- If you have taken alcohol or drugs

Operate unit only if you are physically and mentally well.

### Eye Protection

**WARNING**

- **Eye protection that meets ANSI Z87.1 or CE requirements must be worn whenever you operate the unit.**
- **For additional safety, a full-face shield can be worn over safety glasses or goggles to provide protection from sharp branches or flying debris.**


© 11/23 ECHO Incorporated

## Hand Protection

Wear sturdy, no-slip, rubber work gloves to improve your grip on the handles. Gloves also provide protection against cuts and scratches, cold environments, and reduce the transmission of machine vibration to your hands.

## Hearing and Ear Protection

ECHO recommends wearing personal protective equipment whenever unit is used.

## Breathing Protection

Operators who are sensitive to dust or other common airborne allergens may need to wear a dust mask to prevent inhaling these materials while operating unit. Dust masks can provide protection against dust, plant debris, and other plant matter such as pollen. Make sure the mask does not impair your vision, and replace the mask as needed to prevent air restrictions.

## Proper Clothing

Wear snug-fitting, durable clothing:

- Pants should have long legs, shirts should have long sleeves.
- DO NOT WEAR SHORTS.
- DO NOT WEAR TIES, SCARVES, JEWELRY, or clothing with loose or hanging items that could become entangled in moving parts or surrounding growth.
- Keep clothing buttoned or zipped, and keep shirt tails tucked in.
- Wear sturdy work shoes with nonskid rubber soles.
- DO NOT WEAR OPEN TOED SHOES.
- DO NOT OPERATE UNIT WITH BARE FEET.

Keep long hair away from engine and air intake. Retain hair with cap or net.

Heavy protective clothing can increase operator fatigue, which may lead to heat stroke. Schedule heavy work for early morning or late afternoon hours when temperatures are cooler.


© 11/23 ECHO Incorporated

## ⚠ WARNING

***The components of this machine generate an electromagnetic field during operation, which can interfere with some pacemakers. To reduce the risk of serious or fatal injury, persons with pacemakers should consult with their physician and the pacemaker manufacturer before operating this machine. In the absence of such information, ECHO does not recommend the use of this machine by anyone who has a pacemaker.***

### Extended Operation and Extreme Conditions

## ⚠ CAUTION

***Prolonged exposure to cold and/or vibration can result in injury. Read and follow all safety and operation instructions to minimize risk of injury. Failure to follow instructions can result in painful wrist/hand/arm injuries.***

It is believed that a condition called Raynaud's Phenomenon, which affects the fingers of certain individuals, may be brought about by exposure to vibration and cold. Exposure to vibration and cold may cause tingling and burning sensations, followed by loss of color and numbness in the fingers. The following precautions are strongly recommended, because the minimum exposure, which might trigger the ailment, is unknown.

- Keep your body warm, especially the head, neck, feet, ankles, hands, and wrists.
- Maintain good blood circulation by performing vigorous arm exercises during frequent work breaks, and also by not smoking.
- Limit the hours of operation. Try to fill each day with jobs where operating the unit or other hand-held power equipment is not required.
- If you experience discomfort, redness, and swelling of the fingers followed by whitening and loss of feeling, consult your physician before further exposing yourself to cold and vibration.


© 11/23 ECHO Incorporated

## Repetitive Stress Injuries (RSI)

It is believed that overusing the muscles and tendons of the fingers, hands, arms, and shoulders may cause soreness, swelling, numbness, weakness, and extreme pain in those areas. Certain repetitive hand activities may put you at a high risk for developing a Repetitive Stress Injury (RSI). An extreme RSI condition is Carpal Tunnel Syndrome (CTS), which could occur when your wrist swells and squeezes a vital nerve that runs through the area. Some believe that prolonged exposure to vibration may contribute to CTS. CTS can cause severe pain for months or even years.

To reduce the risk of RSI/CTS, do the following

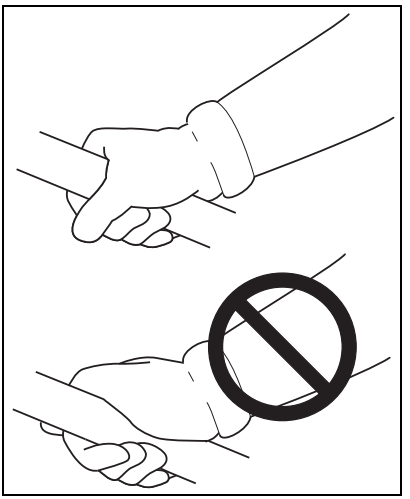

- Avoid using your wrist in a bent, extended, or twisted position. Instead try to maintain a straight wrist position. Also, when grasping, use your whole hand, not just the thumb and index finger.
- Take periodic breaks to minimize repetition and rest your hands.
- Reduce the speed and force with which you do the repetitive movement.
- Do exercises to strengthen the hand and arm muscles.
- Immediately stop using all power equipment and consult a doctor if you feel tingling, numbness, or pain in the fingers, hands, wrists, or arms. The sooner RSI/CTS is diagnosed, the more likely permanent nerve and muscle damage can be prevented.

**⚠ DANGER**

***All over head electrical conductors and communications wires can have electricity flow with high voltages. This unit is not insulated against electrical current. Never touch wires directly or indirectly, otherwise serious injury or death can result.***

**⚠ DANGER**

***Do not operate this product indoors or in inadequately ventilated areas. Engine exhaust contains poisonous emissions and can cause serious injury or death.***


© 11/23 ECHO Incorporated

## Read the Manuals

- Provide all users of this equipment with literature for instructions on Safe Operation.

## Clear the Work Area

- Always clear the work area of foreign objects such as rocks, broken glass, nails, wire, or string, and check for any hidden hazards. Spectators and fellow workers must be warned, and children and animals prevented from coming nearer than 15 m (50 ft.) while the unit is in use.
- Outside the 15 m (50 ft.) zone, there is still a risk of injury from thrown objects.
- Bystanders should be encouraged to wear eye protection.
- If you are approached, stop the engine and cutting attachment.

## Keep a Firm Grip

- Always hold throttle handle and support handle with thumbs and fingers tightly encircling the handles.

## Keep a Solid Stance

- Maintain footing and balance at all times. Do not stand on slippery, uneven or unstable surfaces. Do not work in odd positions or on ladders. Do not over reach.
- Keep cutting attachment below waist.
- Keep all body parts away from rotating cutting attachment

## Avoid Hot Surfaces

- Keep exhaust area clear of flammable debris. Avoid contact during and immediately after operation.


© 11/23 ECHO Incorporated

## Equipment

**WARNING**

***Use only approved attachments. Serious injury may result from the use of a non-approved attachment combination. ECHO Incorporated will not be responsible for the failure of cutting devices, attachments or accessories which have not been tested and approved by ECHO Incorporated. Read and comply with all safety instructions.***

- **Do not attempt to modify this product. Serious injury can result from the use of any modified product.**
- **Check unit for loose or missing nuts, bolts, and screws. Tighten or replace as needed.**
- **Inspect shield for damage and ensure that shield is properly installed, and that the cut-off knife is securely in place. Replace if either is damaged or missing.**
- **Check that the cutting attachment is firmly attached and in safe operating condition.**
- **Manufacturer recommended flexible non-metallic line is installed in the trimmer head.**
- **Assure that throttle trigger, throttle trigger lockout, and stop switch all work properly.**
- **Check that handle and harness (if included) are installed and adjusted for safe, comfortable operation. See Assembly Section for proper adjustment.**

**WARNING**

***Moving parts can amputate fingers or cause severe injuries. Keep hands, clothing and loose objects away from all openings.***

- **ALWAYS stop engine, disconnect spark plug, and make sure all moving parts have come to a complete stop before assembling unit, removing obstructions, clearing debris, or servicing unit.**
- **Do not connect spark plug lead to spark plug until unit is ready for use.**
- **DO NOT start or operate unit unless all guards and protective covers are properly assembled to unit.**
- **NEVER reach into any opening while the engine is running. Moving parts may not be visible through openings.**


© 11/23 ECHO Incorporated

- **Position wiring safely to prevent snagging, separation of connectors, or breakage during operation. Gather excess wire, and secure with wiring clamp if provided on equipment, or tuck behind the air filter area. Do not place wiring directly against hot engine components.**
- **Check wiring and connectors for nicks, cuts, exposed wire, or other damage, and repair or replace as needed. Exposed wire or connectors can cause shocks, sparks, and risk of fire or explosion, resulting in serious injury.**
- **Check wire terminals for secure connections.**

## ⚠ WARNING

***Periodically Check fuel system (fuel lines, vent, grommet, fuel tank, and fuel cap) for leaks especially if the unit is dropped. If damage or leaks are found, do not use unit, otherwise serious personal injury or property damage may occur. Have unit repaired by an authorized servicing dealer before using.***


© 11/23 ECHO Incorporated

# EMISSION CONTROL (EXHAUST & EVAPORATIVE)

## EPA Emissions Control Information

The emission control system for the engine is EM (engine modification) and, if the second to last character of the Engine Family on the Emission Control Information label (see example) is “B”, “C”, “K”, or “T”, the emission control system is EM and TWC (3-way catalyst). The fuel tank/fuel line emission control system is EVAP (evaporative emissions).

**An Emission Control Label** is located on the engine. (This is an EXAMPLE ONLY, information on label varies by engine FAMILY).

### Product Emission Durability (Emission Compliance Period)

The 50 or 300 hour emission compliance period is the time span selected by the manufacturer certifying the engine emissions output meets applicable emissions regulations, provided that approved maintenance procedures are followed as listed in the Maintenance Section of this manual.


© 11/23 ECHO Incorporated

# DESCRIPTION

Locate the safety decal(s) or etching(s) on your unit. Make sure they are legible, and that you understand and follow the instructions. If any cannot be read, replacements can be ordered from your ECHO dealer. Images shown below are for example only. Those on your unit might appear slightly different.

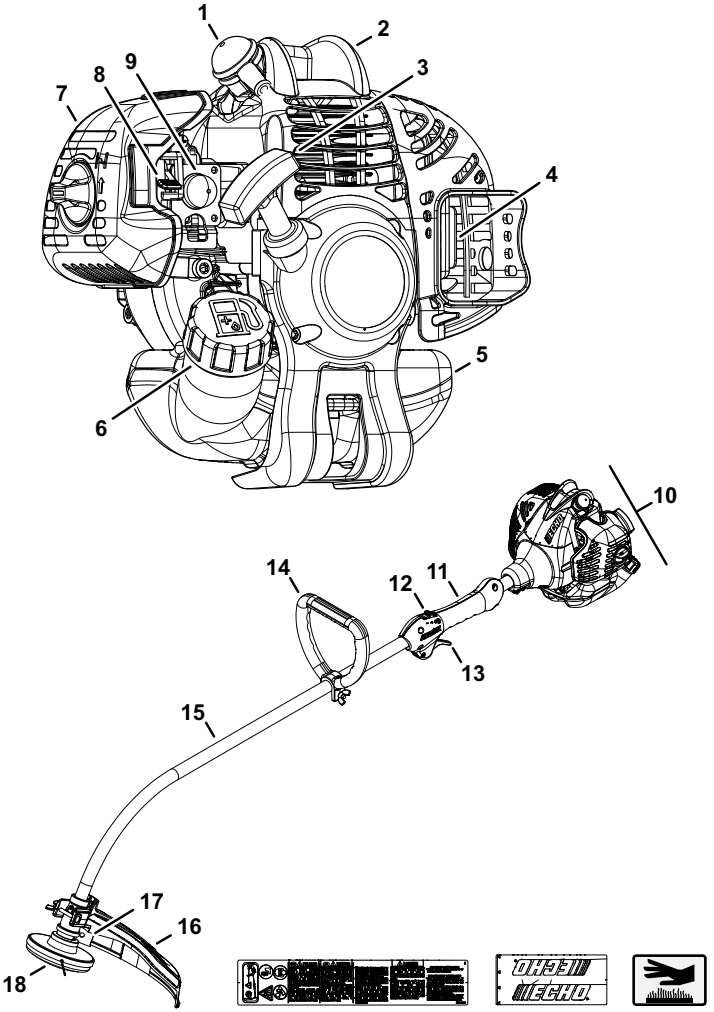



© 11/23 ECHO Incorporated

1. Spark Plug
2. Top Guard
3. Recoil Starter/Handle
4. Spark Arrester Muffler or Spark Arrester Muffler with Catalyst
5. Fuel Tank
6. Fuel Tank Cap
7. Air Cleaner
8. Choke Lever
9. Purge Bulb
10. Power Head
11. Throttle Handle - For Right Hand
12. Stop Switch
13. Throttle Trigger
14. Support Handle - For Left Hand
15. Drive Shaft Assembly
16. Debris Shield with Cut-Off Knife
17. Cut-Off Knife
18. Rapid Loader® Head

# CONTENTS

The ECHO product you purchased has been factory pre-assembled for your convenience. Due to packaging restrictions, some assembly may be necessary.

After opening the carton, check for damage. Immediately notify your retailer or ECHO Dealer of damaged or missing parts. Use the contents list to check for missing parts.

| | |
|---|---|
| 1 | Power Head / Drive Shaft Assembly |
| 1 | Quick Start Guide |
| 1 | Warranty Statement |
| 12 | Pieces of pre-cut Nylon Line |
| 1 | Shield Assembly |


© 11/23 ECHO Incorporated

# ASSEMBLY

## Shield Installation

Parts required: Shield Assembly.

**WARNING**

***Cut-off knife on debris shield has sharp edges. Avoid contact when installing or removing line head.***

**CAUTION**

***Wear gloves or personal injury may result:***

- ***Cut-off knife is sharp.***
- ***Gear case and surrounding area may be hot.***

1. Remove wing nut (A), washer (B), and bolt (C).
2. Snap the shield over the bearing housing.
3. Install bolt (C), washer (B), and wing nut (A).

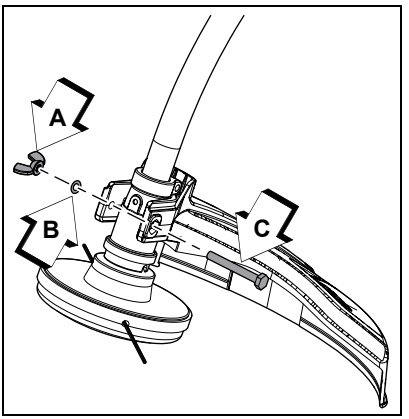


## Nylon Line Installation

**WARNING**

***Never use wire or wire-rope that can break off and become a dangerous “projectile”. Serious injury can occur.***


© 11/23 ECHO Incorporated

1. Shut engine OFF. Lay unit on the ground with head assembly up.
2. Insert one piece of trimmer line through eyelet (A) on each side of head. Route line as shown.
3. Remove old nylon line in direction shown.

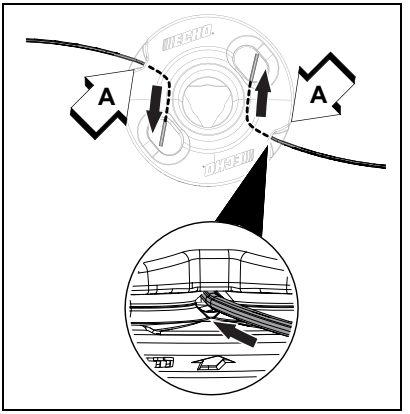


## Support Handle

Note: Label (A) shows minimum spacing for Support Handle location.

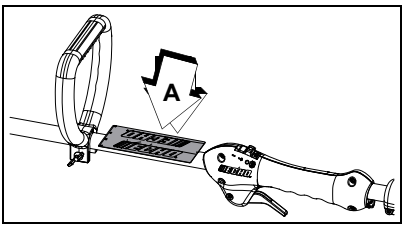


Note: Support Handle is pre-installed. Re-positioning and tightening is all that is required.

1. Position Support Handle (A) in comfortable operating position and tighten wing nut (B). The cutting attachment should be 5 cm to 7.5 cm (2 in. to 3 in.) above the ground and as level as possible.

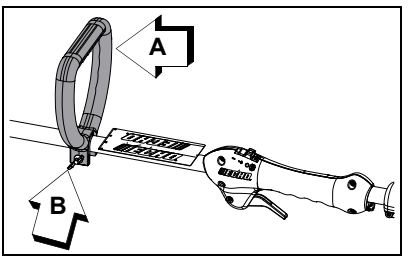



© 11/23 ECHO Incorporated

# OPERATION

**WARNING**

***Moving parts can amputate fingers or cause severe injuries. Keep hands, clothing and loose objects away from all openings. Always stop engine, disconnect spark plug, and make sure all moving parts have come to a complete stop before removing obstructions, clearing debris, or servicing unit.***

**WARNING**

***Engine exhaust IS HOT, and contains Carbon Monoxide (CO), a poison gas. Breathing CO can cause unconsciousness, serious injury, or death. Exhaust can cause serious burns. ALWAYS position unit so that exhaust is directed away from your face and body.***

**WARNING**

***Operation of this equipment may create sparks that can start fires around dry vegetation. This unit is equipped with a spark arrester to prevent discharge of hot particles from the engine. Metal cutters can also create sparks if the cutter strikes rocks, metal, or other hard objects. Contact local fire authorities for laws or regulations regarding fire prevention requirements.***

## Fuel

**WARNING**

***Diesel fuels and alternative fuels, such as E-15 (15% ethanol), E-85 (85% ethanol) or any fuels not meeting ECHO requirements are NOT approved for use in ECHO 2-stroke gasoline engines. Use of diesel or alternative fuels can cause performance problems, loss of power, overheating, fuel vapor lock, and unintended machine operation, including, but not limited to, improper clutch engagement. Diesel or alternative fuels can also cause premature deterioration of fuel lines, gaskets, carburetors and other engine components.***


© 11/23 ECHO Incorporated

## Fuel Requirements

**Gasoline** - Use fresh (purchased within the last 30 days from the pump) 89 Octane [R+M/2] (mid grade or higher) gasoline known to be good quality. Gasoline may contain up to 10% Ethanol (grain alcohol) or 15% MTBE (methyl tertiary-butyl ether). Gasoline containing methanol (wood alcohol) is **NOT** approved. Use of ECHO branded fuel is recommended to extend engine life in all air-cooled 2-stroke and 2/4-stroke hybrid engines.

**Two Stroke Oil** - A two-stroke engine oil, such as ECHO branded 2-stroke oils, meeting ISO-L-EGD (ISO/CD 13738) and J.A.S.O. FD Standards must be used. ECHO branded 2-stroke oils meet these standards. Engine problems due to inadequate lubrication caused by failure to use an ISO-L-EGD (ISO/CD 13738) and J.A.S.O. M345-FD certified oil will void the two-stroke engine warranty.

**WARNING**

***2-Stroke engine oil contains petroleum distillates and other additives that may be harmful if swallowed. Heated oil can release vapors that can cause flash fire, or ignite with explosive force. Read and follow the oil manufacturer's instructions, and observe all safety warnings and precautions for handling flammable liquids. For more detailed safety and first aid information, visit www.echo-usa.com for a copy of the Material Safety Data Sheet.***

- **KEEP OUT OF REACH OF CHILDREN.**
- **If swallowed, do not induce vomiting. CALL PHYSICIAN OR A POISON CONTROL CENTER IMMEDIATELY.**
- **WEAR SAFETY GLASSES when mixing or handling.**
- **AVOID repeated or prolonged skin contact.**
- **AVOID inhaling oil mists or vapors.**

**NOTICE**

*ECHO branded 2-stroke oils may be mixed at 50:1 ratio for application in all ECHO engines sold in the past regardless of ratio specified in those manuals.*


© 11/23 ECHO Incorporated

## Handling Fuel

**DANGER**

***Fuel is VERY flammable. Use extreme care when mixing, storing or handling, or serious personal injury will result.***

- ***Use an approved fuel container. Mark fuel containers as containing 2-stroke mixture fuel.***
- ***DO NOT smoke near fuel.***
- ***DO NOT allow flames or sparks near fuel.***
- ***Fuel tanks/cans may be under pressure. Always loosen fuel caps slowly allowing pressure to equalize.***
- ***NEVER refuel a unit when the engine is HOT or RUNNING!***
- ***DO NOT fill fuel tanks indoors. ALWAYS fill fuel tanks outdoors over bare ground.***
- ***DO NOT overfill fuel tank. Wipe up spills immediately.***
- ***Securely tighten fuel tank cap and close fuel container after refueling.***
- ***Inspect for fuel leakage. If fuel leakage is found, do not start or operate unit until leakage is repaired.***
- ***Use caution when handling fuel. Mix and pour fuel outdoors where there are no sparks and flames. Slowly remove the fuel cap only after stopping the engine and allowing the unit to cool. Do not smoke while fueling or mixing fuel. Move the unit at least 10 feet (3 m) from the fueling point before starting the engine.***

**DANGER**

***Gasoline vapor is heavier than air, and can travel along the ground to nearby sources of ignition such as electrical motors, pilot lights, and hot or running engines. Vapors ignited by an ignition source can flash back to the fuel container, resulting in an explosion, fire, serious or fatal injuries, and extensive property damage.***


© 11/23 ECHO Incorporated

***Mixing Instructions***

## NOTICE

*Stored fuel ages. Do not mix more fuel than you expect to use in 30 days, 90 days when a fuel stabilizer is added.*

1. Fill an approved fuel container with half of the required amount of gasoline.
2. Add the proper amount of 2-stroke oil to gasoline.
3. Close container and shake to mix oil with gasoline.
4. Add remaining gasoline, close fuel container, and remix.

| Fuel to Oil Mix – 50:1 Ratio | | | |
|---|---|---|---|
| US | | Metric | |
| Gas | Oil | Gas | Oil |
| gal. | fl.oz. | L | cc |
| 1 | 2.6 | 5 | 100 |
| 2 | 5.2 | 10 | 200 |
| 5 | 13 | 25 | 500 |

## NOTICE

*Spilled fuel is a leading cause of hydrocarbon emissions. Some locations may require the use of automatic fuel shut-off containers to reduce fuel spillage.*

**Storage** - Fuel storage laws vary by locality. Contact your local government for the laws affecting your area. As a precaution, store fuel in an approved, airtight container. Store in a well-ventilated, unoccupied building, away from sparks and flames.

- Empty the fuel tank prior to storing the unit. Return unused fuel to an approved fuel storage container.

## NOTICE

*Stored two-stroke fuel can separate. ALWAYS shake fuel container thoroughly before each use.*

## NOTICE

*Used oil and gasoline, and soiled towels are hazardous waste materials. Disposal laws vary by locality.*


© 11/23 ECHO Incorporated

## Starting Cold Engine

**WARNING**

***The attachment will operate immediately when the engine starts, and could result in possible serious injury. Keep movable parts of the attachment away from objects that could become entangled or thrown, and surfaces that could cause loss of control.***

1. *Stop Switch*

   Move stop switch (A) away from the STOP position.

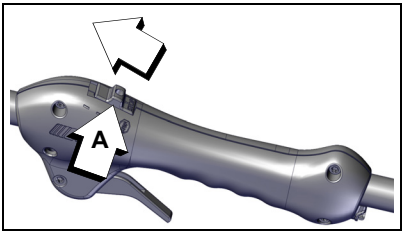


2. *Choke*

   Move choke lever (B) to COLD START position (|⊸|).

3. *Purge Bulb*

   Pump purge bulb (C) until fuel is visible and flows freely in the clear fuel tank return line. Pump bulb an additional 4 or 5 times.

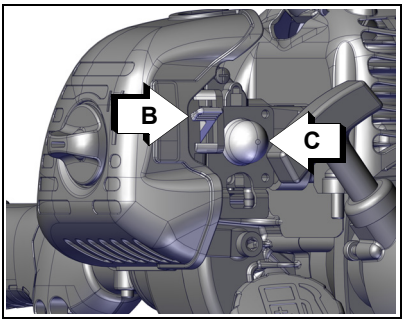


Note: Energy is stored in the starter spring each time the handle/rope is pulled. Generally two to six pulls, using light pulling force, will store enough energy to engage the starter and spin the engine. Do not pull the rope out to end stop.

4. *Recoil Starter*

   Lay the unit on a flat area and keep movable attachment parts clear of all obstacles. Firmly grasp throttle handle with left hand and fully depress throttle trigger to wide open position. Gently pull recoil starter handle/ rope (D) until engine fires or 2 to 3 engine engagements.

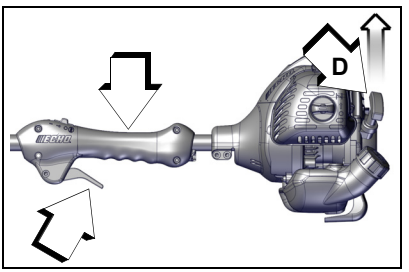



© 11/23 ECHO Incorporated

5. *Choke*

   After engine fires, or 2 to 3 engine engagements, move choke lever (B) to the Run position (|♦|). Firmly grasp throttle handle with left hand and fully depress throttle trigger to wide open position. Gently pull starter handle/ rope until engine starts and runs. Release throttle trigger and allow unit to warm up at idle for several minutes.

Note: If engine does not start with choke in “RUN” position after 2-3 engine engagements, repeat instructions 2 - 5.

6. *Throttle Trigger*

   After engine warm-up, grip throttle handle and support handle. Gradually depress throttle trigger to increase engine RPM to operating speed.

## Starting Warm Engine

The starting procedure is the same as Cold Start except DO NOT close the choke, and do not depress throttle trigger to wide open position.

**⚠ WARNING**

***The attachment should not move at idle, otherwise serious personal injury may result.***

Note: If attachment moves, readjust carburetor according to “Carburetor Adjustment” instructions in this manual or see your ECHO Dealer.

1. *Stop Switch*

   Move stop switch (A) away from the STOP position.

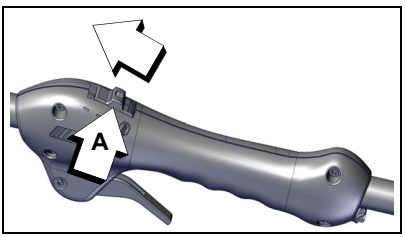


2. *Purge Bulb*

   Pump purge bulb (C) until fuel is visible and flows freely in the clear fuel tank return line. Pump bulb an additional 4 or 5 times.

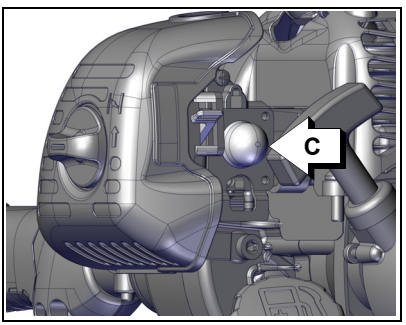



© 11/23 ECHO Incorporated

Note: Energy is stored in the starter spring each time the handle/ rope is pulled. Generally two to six pulls, using light pulling force, will store enough energy to engage the starter and spin the engine. Do not pull the rope out to end stop.

3. *Recoil Starter*

   Lay the unit on a flat area and keep movable attachment parts clear of all obstacles. Firmly grip throttle handle with left hand. Gently pull recoil starter handle/ rope (D) until engine fires.

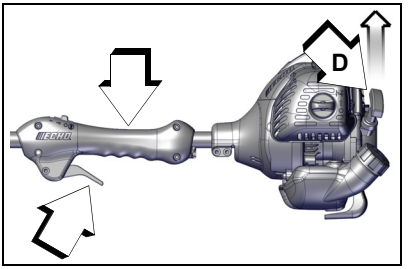


Note: If engine does not start after 2-3 engine engagements, use Cold Start Procedure.

## Stopping Engine

**WARNING**

***If engine does not stop when stop switch is moved to STOP position, close choke - COLD START position - to stall engine. Have your dealer repair stop switch before using unit again.***

1. *Throttle*

   Release throttle and allow engine to return to idle before shutting off engine.

2. *Stop Switch*

   Move stop switch (A) to STOP position.

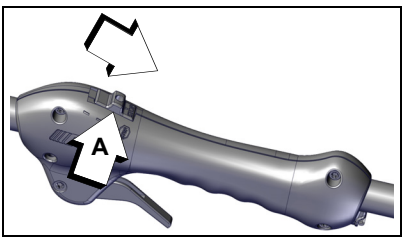



© 11/23 ECHO Incorporated

## Applications

**WARNING**

***Do not install blades on GT (Curved Shaft) trimmers.***

## Operating Techniques - Nylon Line Head

Nylon line heads may be used for trimming, scything, edging, and scalping of grass and light weeds.

**NOTICE**

*Units with Speed Feed® line heads ONLY: To advance trimmer line, tap trimmer head against the ground while the head is turning at normal operating speed.*

### Trimming

Feed the spinning line into the material to be cut. Tilt cutting head to the left while cutting to direct debris away from the operator.

### Scything

Scything - Swing the cutting head in a level arc, gradually feeding the line into the material being cut. Move forward with each arc to cut a swath. Width of cutting swath depends on arc. Use a larger arc for a wider swath, or a smaller arc for a narrow swath. Keep line head tilted to direct cutting debris forward or away from you.

### Edging and Scalping

Both of these are done with the nylon line cutting head tilted at a steep angle. Scalping is removing top growth, leaving the earth bare. Edging is trimming the grass back where it has spread over a pavement or driveway. During both edging and scalping, hold the unit at a steep angle in a position where the debris, and any dislodged dirt and stone, will not come back towards you even if it ricochets off the hard surface.

### General

- Debris flows in direction of line head rotation. Change line head position to assure debris flow is directed away from operator.
- Keep cutting line away from wire fences to avoid entanglement.
- Operate trimmer only with cutting head below knee height.


© 11/23 ECHO Incorporated

# MAINTENANCE

**WARNING**

***Moving parts can amputate fingers or cause severe injuries. Keep hands, clothing and loose objects away from all openings. Always stop engine, disconnect spark plug, and make sure all moving parts have come to a complete stop before removing obstructions, clearing debris, or servicing unit. Allow the unit to cool before performing maintenance or adjustments. Wear gloves to protect hands from sharp edges and hot surfaces.***

**WARNING**

***Operating a poorly maintained unit can result in serious injuries to operator or bystanders. Always follow all maintenance instructions as written, otherwise serious personal injury can result.***

Your unit is designed to provide many hours of trouble free service. Regular scheduled maintenance will help your unit achieve that goal. If you are unsure or are not equipped with the necessary tools, we recommend that you take your unit to a Servicing Dealer for maintenance. To help you decide whether you want to DO-IT-YOURSELF or have the Dealer do it, each maintenance task has been graded. If the task is not listed, see your Dealer for repairs.

**NOTICE**

*The use of emission control components other than those specifically designed for this unit is a violation of federal law.*

## Skill Levels

**Level 1** = Easy to do. Common tools may be required.

**Level 2** = Moderate difficulty. Some specialized tools may be required.

**Level 3** = See your dealer.

Click HERE or go to http://www.echo-usa.com/products/maintenance-kit

or


© 11/23 ECHO Incorporated

HERE https://www.shindaiwa-usa.com/you-can.aspx

## Maintenance Intervals

| COMPONENT/SYSTEM | MAINTENANCE PROCEDURE | REQUIRED SKILL LEVEL |
|---|---|---|
| **Daily or Before Use** | | |
| Air Filter | Inspect/Clean * | 1 |
| Choke Shutter | | |
| Fuel System | Inspect* | |
| Cooling System | Inspect/Clean | 2 |
| Recoil Starter Rope | Inspect/Clean * | 1 |
| Screws/Nuts/Bolts | Inspect/Tighten/Replace * | |
| **Every Refuel** | | |
| Fuel System | Inspect* | 1 |
| **3 Months** | | |
| Air Filter | Replace * | 1 |
| Fuel Filter | Inspect * | |
| Fuel Cap Gasket | | |
| Spark Plug | Inspect/Clean/Replace * | |
| Muffler Spark Arrester | | 2 |
| Cylinder Exhaust Port | Inspect/Clean/De-carbon | |
| Drive Shaft (Flex Cable Models) | Grease [1] | |
| Gear Housing | None | – |
| **Yearly** | | |
| Fuel Filter | Inspect/Replace * | 1 |
| Fuel Cap Gasket | Replace * | |

**IMPORTANT NOTE** - Time intervals shown are maximum. Actual use and your experience will determine the frequency of required maintenance.

**MAINTENANCE PROCEDURE NOTES:**

[1]Apply lithium-based grease every 25 hours of use.

* Replacement is recommended based on the finding of damage or wear during inspection.


© 11/23 ECHO Incorporated

## Air Filter

**Level 1.**

Parts required: Tune-Up Kit.

1. Close choke (COLD START position). This prevents dirt from entering the carburetor throat when the air filter is removed. Brush accumulated dirt from air cleaner area.
2. Remove air filter cover. Brush dirt from inside cover.
3. Replace filter if it is damaged, fuel soaked, very dirty, or the rubber sealing edges are deformed.
   - Lightly brush debris from filter.
   - Soak heavily soiled filters in water/detergent solution to loosen dirt, then brush lightly.
   - Rinse with clean water and allow to dry completely before reuse.
4. Install air filter in air filter case.
5. Install air filter cover.

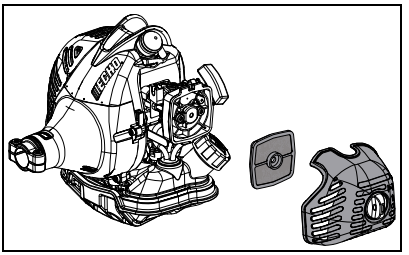


© 11/23 ECHO Incorporated

## Fuel Filter

**Level 1.**

Parts required: Tune-Up Kit.

**DANGER**

***Fuel is VERY flammable. Use extreme care when mixing, storing or handling, or serious personal injury may result.***

1. Use a clean rag to remove loose dirt from around fuel cap and empty fuel tank.

**NOTICE**

*Do not damage fuel line while removing fuel filter from tank or line.*

2. Pull the fuel filter from the tank.
3. Do not remove the wire coil clamp to remove the fuel filter. Pinch the fuel filter with the fingers on one hand and the fuel line with the other hand. Pull and twist slightly to separate.
4. Install the new filter with the reverse action.

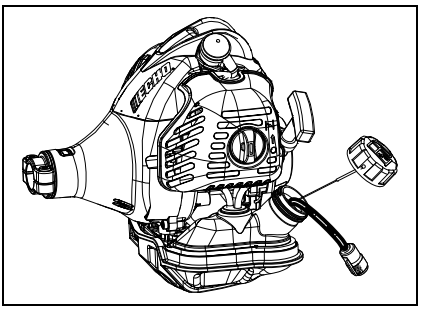

Note: Federal EPA regulations require all model year 2012 and later gasoline powered engines produced for sale in the United States to be equipped with a special low permeation fuel supply hose between the carburetor and fuel tank. When servicing model year 2012 and later equipment, only fuel supply hoses certified by EPA can be used to replace the original equipment supply hose. Fines up to $37,500 may be enforced for using a non-certified replacement part.


© 11/23 ECHO Incorporated

## Spark Plug

**Level 2.**

Parts required: Tune-Up Kit.

**NOTICE**

*Use only NGK BPM8Y spark plug (BPMR8Y in Canada) otherwise severe engine damage may occur.*

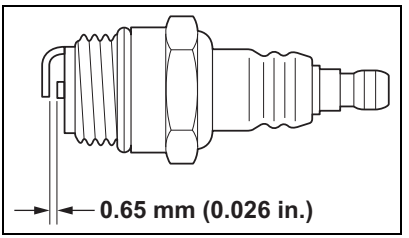


1. Remove spark plug and check for fouling, worn and rounded center electrode.
2. Clean the plug or replace with a new one. DO NOT sand blast to clean. Remaining sand will damage engine.
3. Adjust spark plug gap by bending outer electrode.
4. Tighten spark plug to 130-170 kgf•cm (112-150 lbf•in).

## Cooling System

**Level 2.**

**NOTICE**

*To maintain proper engine operating temperatures, cooling air must pass freely through the cylinder fin area. This flow of air carries combustion heat away from the engine.*

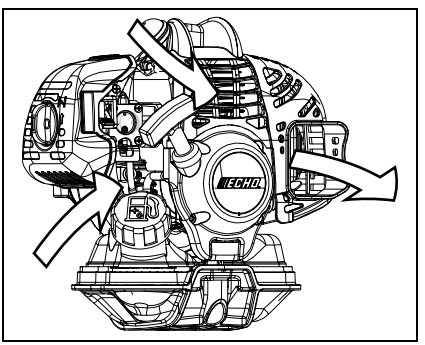


Overheating and engine seizure can occur when:

- Air intakes are blocked, preventing cooling air from reaching the cylinder.
- Dust and grass build up on the outside of the cylinder. This build up insulates the engine and prevents the heat from leaving.

Removal of cooling passage blockages or cleaning of cooling fins is considered “Normal Maintenance.” Any failure attributed to lack of maintenance is not warranted.


© 11/23 ECHO Incorporated

1. Remove spark plug lead.
2. Close choke (COLD START [|⊸|] position). This prevents dirt from entering the carburetor throat when the air filter is removed. Remove air cleaner cover (A).
3. Remove engine cover (B).

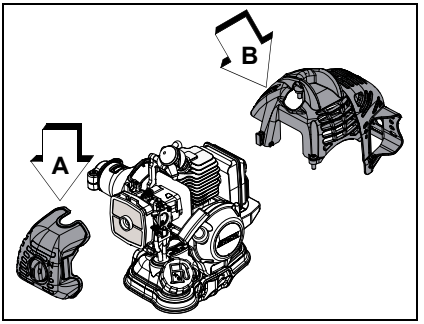


## NOTICE

*DO NOT use a metal scraper to remove dirt from the cylinder fins.*

4. Use a brush to remove dirt from the cylinder fins.
5. Remove ignition wires from clip for cleaning.

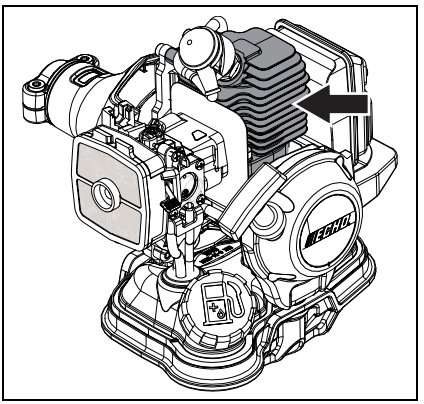

6. Remove grass and leaves from the grid between the recoil starter and fuel tank.
7. Assemble components in reverse order.

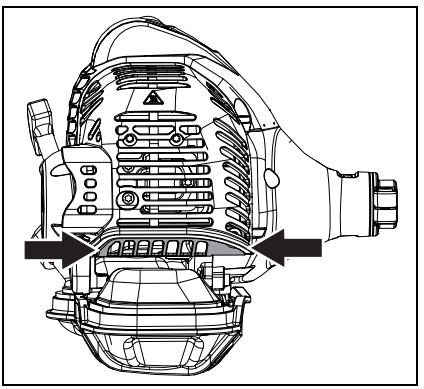


© 11/23 ECHO Incorporated

# Exhaust System

## Spark Arrester Screen

**Level 2.**

Parts required: Spark Arrester Screen, Gasket.

1. Remove spark plug lead and engine cover.
2. Place piston at Top Dead Center (TDC) to prevent carbon/dirt from entering cylinder.
3. Remove spark arrester screen cover (C), gasket (D), and screen (E), from muffler body.
4. Clean carbon deposits from muffler components.

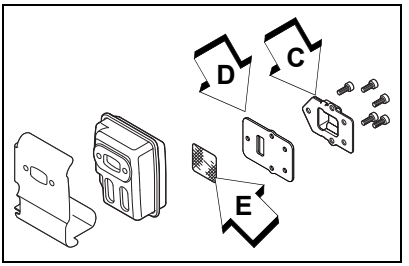


Note: When cleaning carbon deposit, be careful not to damage the catalytic element inside muffler.

5. Replace screen if it is cracked, plugged, or has holes burned through.
6. Assemble components in reverse order.

## Exhaust Port Cleaning

**Level 2.**

Parts required: Heat Shield (as needed).

1. Remove spark plug lead from spark plug, and remove engine cover.
2. Place piston at top dead center. Remove muffler (A) and heat shield (B).

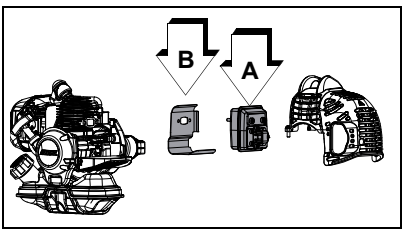



© 11/23 ECHO Incorporated

3. Use a wood or plastic scraping tool to clean deposits from cylinder exhaust port (C).

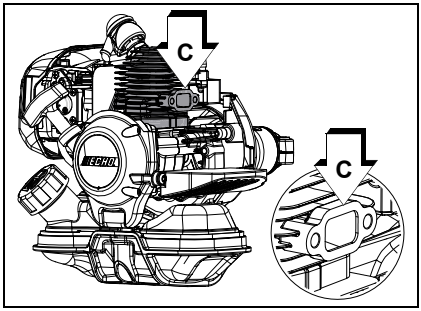


## NOTICE

*Never use a metal tool to scrape carbon from the exhaust port. Do not scratch the cylinder or piston when cleaning the exhaust port. Do not allow carbon particles to enter the cylinder.*

4. Inspect heat shield, and replace if damaged.
5. Install heat shield and muffler.
6. Tighten muffler mounting bolts (or nuts) to 90-110 kgf•cm (80-95 lbf•in).
7. Install engine cover and attach spark plug lead.
8. Start engine, and warm to operating temperature.
9. Stop engine, and re-tighten mounting bolts (or nuts) to specifications.

## Carburetor Adjustment

**Level 2.**

### Engine Break-In

New engines must be operated a minimum duration of two tanks of fuel break-in before carburetor adjustments can be made. During the break-in period your engine performance will increase and exhaust emissions will stabilize. Idle speed can be adjusted as required.

### High Altitude Operation

This engine has been factory adjusted to maintain satisfactory starting and durability performance up to 335 m (1,100 ft.) above sea level (ASL) (96.0 kPa). To maintain proper engine operation and emission compliance above 335 m (1,100 ft.) ASL the carburetor may need to be adjusted by an authorized service dealer.


© 11/23 ECHO Incorporated

## NOTICE

*If the engine is adjusted for operation above 335 m (1,100 ft.) ASL, the carburetor must be re-adjusted when operating the engine below 335 m (1,100 ft.) ASL, otherwise severe engine damage may result.*

Note: Every unit is run at the factory and the carburetor is set in compliance with emission regulations. Carburetor adjustments, other than idle speed, must be performed by an authorized dealer.

## WARNING

- **The cutting attachment may be moving during carburetor adjustments.**
- **Wear your protective equipment and observe all safety instructions.**
- **For units equipped with a clutch, be sure the cutting attachment stops moving when the engine idles.**
- **When the unit is turned off, make sure the cutting attachment has stopped before the unit is set down.**

1. Check idle speed and reset if necessary. If a tachometer is available, idle speed screw (A) should be set to the specifications found on “Specifications” page of this manual. Turn idle screw (A) clockwise to increase idle speed; counterclockwise to decrease idle speed.

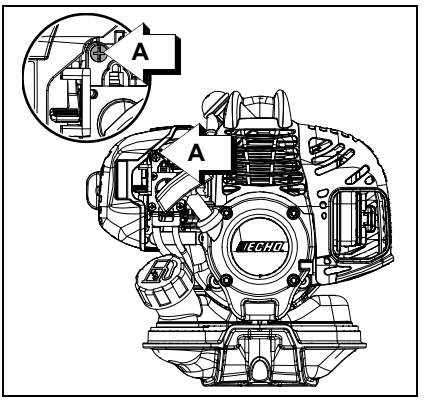


## WARNING

***When carburetor adjustment is completed, the cutting attachment should not move at idle, otherwise serious personal injury may result.***


© 11/23 ECHO Incorporated

## Lubrication

**Level 1.**

Parts required: Lithium-based grease.

1. Remove shield.
2. Loosen bearing housing locating screw (A), at the top of the housing, loosen mounting screw (B) and remove gear case from drive housing.
3. Pull the flexible drive shaft (C) from the drive housing, wipe clean and apply 15 ml (0.5 oz.) of grease.
4. Slide the flexible drive shaft back in the drive housing being careful not to get dirt on the flexible drive shaft.

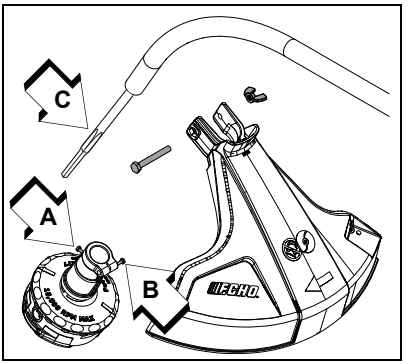


5. Install the bearing housing and shield.


© 11/23 ECHO Incorporated

# TROUBLESHOOTING

| ENGINE PROBLEM TROUBLESHOOTING CHART | | | | |
|---|---|---|---|---|
| **Problem** | **Check** | **Status** | **Cause** | **Remedy** |
| Engine starts hard<br><br>or<br><br>Engine does not start | Fuel at carburetor | No fuel at carburetor | Fuel strainer or fuel line obstructed | Clean or replace<br><br>See your dealer |
| | Fuel at cylinder | No fuel at cylinder | Carburetor | See your dealer |
| | | Muffler wet with fuel | Fuel mixture too rich | OPEN choke<br><br>Clean or replace air filter<br><br>Adjust carburetor<br><br>See your dealer |
| | Spark at end of plug wire | No spark | STOP switch OFF - Electrical problem - Interlock switch | Turn switch to ON<br><br>See your dealer |
| | Spark at plug | | Incorrect gap - Covered with carbon - Fouled with fuel - Plug defective | Adjust to 0.65 mm (0.026 in.)<br><br>Clean or replace plug |
| Engine runs, but dies<br><br>or<br><br>Engine does not accelerate properly | Air filter | Air filter dirty | Normal wear | Clean or replace |
| | Fuel filter | Fuel filter dirty | Contaminants or residue in fuel | Replace filter or replace fuel |
| | Fuel vent | Fuel vent plugged | Contaminated fuel | Clean or replace |


© 11/23 ECHO Incorporated

| ENGINE PROBLEM TROUBLESHOOTING CHART | | | | |
|---|---|---|---|---|
| **Problem** | **Check** | **Status** | **Cause** | **Remedy** |
| Engine runs, but dies<br><br>or<br><br>Engine does not accelerate properly | Spark plug | Plug dirty or worn | Normal wear | Clean and adjust or replace |
| | Carburetor | Improper adjustment | Vibration | Adjust |
| | Cooling system | Cooling system dirty or plugged | Extended operation in dirty or dusty locations | Clean |
| | Spark arrester screen | Spark arrester screen plugged | Normal wear | Replace |
| Engine does not crank | N/A | | Internal engine problem | See your dealer |

**DANGER**

***Fuel vapors are extremely flammable and can cause fire and/or explosion. Never test for ignition spark by grounding spark plug near cylinder plug hole, otherwise serious personal injury can result.***


© 11/23 ECHO Incorporated

# STORAGE

**WARNING**

***During operation the muffler or catalytic muffler and surrounding cover become hot. Always keep exhaust area clear of flammable debris during transportation or when storing, otherwise serious property damage or personal injury may result.***

## Long Term Storage (Over 30 Days)

Do not store your unit for a prolonged period of time (30 days or longer) without performing protective storage maintenance which includes the following:

1. Store unit in a dry, dust free place, out of the reach of children.

**DANGER**

***Do not store in enclosure where fuel fumes may accumulate or reach an open flame or spark.***

2. Place the stop switch in the “OFF” position.
3. Remove accumulation of grease, oil, dirt and debris from exterior of unit.
4. Perform all periodic lubrication and services that are required.
5. Tighten all the screws and nuts.
6. Drain fuel tank completely. Press purge bulb six to seven times to remove remaining fuel from carburetor then drain the tank again. Close choke, start and run the engine until it stops due to lack of fuel.
7. Allow engine to cool. Remove the spark plug lead from the spark plug. Remove the spark plug. Pour 7 cc (0.25 oz.) of fresh, clean, two-stroke engine oil into the cylinder through the spark plug hole.
8. Pull the recoil starter handle two to three times to distribute the oil inside the engine.
9. Observe the piston location through the spark plug hole. Pull the recoil handle slowly until the piston reaches the top of its travel and leave it there.
10. Install the spark plug. Connect the spark plug lead to the spark plug.


© 11/23 ECHO Incorporated

# SPECIFICATIONS

For units with the following serial numbers:

U01313001001 - U01313999999
U01413001001 - U01413999999
U36013001001 - U36013999999

| MODEL | GT-225i |
|---|---|
| Length | 1,370 mm (53.9 in.) |
| Width | 315 mm (12.4 in.) |
| Height | 540 mm (21.3 in.) |
| Weight (dry) without Cutter Head | 4.3 kg (9.48 lb.) |
| Engine Type | Air-cooled, two-stroke, single-cylinder gasoline engine |
| Bore | 32.2 mm (1.27 in.) |
| Stroke | 26.0 mm (1.02 in.) |
| Displacement | 21.2 $cm^3$ (1.29 $in.^3$) |
| Exhaust | Spark arrester muffler or spark arrester muffler with catalyst |
| Carburetor | Diaphragm with purge pump |
| Ignition System | Flywheel magneto, capacitor discharge ignition type |
| Spark Plug | NGK BPM8Y (BPMR8Y in Canada)<br>Gap 0.65 mm (0.026 in.) |
| Fuel | Mixed (gasoline and two-stroke oil) |
| Gasoline/Oil Ratio | 50:1 |
| Gasoline | Use 89 Octane unleaded. Do not use fuel containing methyl alcohol, more than 10% ethyl alcohol or 15% MTBE. Do not use alternative fuels such as E-15 or E-85. |
| Oil | ISO-L-EGD (ISO/CD 13738) and J.A.S.O. M345- FD, two-stroke, air-cooled engine oil. |
| Fuel Tank Capacity | 0.42 L (14.9 US fl. oz.) |
| Starter System | Automatic rewind starter with power spring assist |
| Clutch | Centrifugal type |


© 11/23 ECHO Incorporated

| MODEL | GT-225i |
|---|---|
| Drive Shaft | 6.0 mm (0.25 in.) flexible shaft |
| Rotating Direction | Clockwise (viewed from top) |
| Cutter Head | 2-Line Rapid-Loader® Head (nylon lines) |
| Handle | Front - D-loop type with plastic grip<br><br>Rear - Plastic grip with throttle trigger and switch |
| Idle Speed | 3,000 RPM |
| Clutch Engagement Speed | 4,300 RPM |
| Wide Open Throttle Speed | 7,500 RPM |

# SPECIFICATIONS

For units with the following serial numbers:

U67313001001 - U67313999999
U67513001001 - U67513999999
U74513001001 - U74513999999

| MODEL | GT-225i |
|---|---|
| Length | 1,371 mm (53.9 in.) |
| Width | 318 mm (12.5 in.) |
| Height | 540 mm (21.3 in.) |
| Weight (dry) without cutter head | 4.4 kg (9.7 lb.) |
| Engine Type | Air-cooled, two-stroke, single-cylinder gasoline engine |
| Bore | 32.2 mm (1.27 in.) |
| Stroke | 26.0 mm (1.02 in.) |
| Displacement | 21.2 $cm^3$ (1.29 $in.^3$) |
| Exhaust | Spark arrester muffler or spark arrester muffler with catalyst |
| Carburetor | Diaphragm with purge pump |
| Ignition System | Flywheel magneto, capacitor discharge ignition type |


© 11/23 ECHO Incorporated

| MODEL | GT-225i |
|---|---|
| Spark Plug | NGK BPM8Y (Canada NGK BPMR8Y)<br>Gap 0.65 mm (0.026 in.) |
| Fuel | Mixed (gasoline and two-stroke oil) |
| Gasoline/Oil Ratio | 50:1 |
| Gasoline | 89 octane unleaded. Do not use fuel containing methyl alcohol, more than 10% ethyl alcohol or 15% MTBE. Do not use alternative fuels such as E-20 or E85. |
| Oil | ISO-L-EGD (ISO/CD 13738) JASO M345-FD two stroke, certified air cooled engine oil. |
| Fuel Tank Capacity | 0.38 L (12.8 US fl. oz.) |
| Starter System | Automatic rewind starter with power spring assist |
| Clutch | Centrifugal type |
| Drive Shaft | 6.0 mm (0.25 in.) flexible shaft |
| Rotating Direction | Clockwise (viewed from top) |
| Cutter Head | 2-Line Rapid Loader® Head (nylon lines) |
| Handle | Front - D-loop type with plastic grip<br><br>Rear - Plastic grip with throttle trigger and switch |
| Idle Speed | 3,000 RPM |
| Clutch Engagement Speed | 4,300 RPM |
| Wide Open Throttle Speed | 7,500 RPM |


© 11/23 ECHO Incorporated

# PRODUCT REGISTRATION

## Thank you for choosing ECHO Power Equipment

Please go to http://www.echo-usa.com/Warranty/Register-Your-ECHO to register your new product on-line. It's ***FAST*** and ***EASY***! NOTE: your information will never be sold or misused by ECHO, Incorporated. Registering your purchase enables us to contact you in the unlikely event of a service update or product recall, and verifies your ownership for warranty consideration.

If you do not have access to the Internet, you can complete the form below and mail to:

***ECHO Incorporated, Product Registration, PO Box 1139,***
***Lake Zurich, IL 60047.***


© 11/23 ECHO Incorporated

# PRODUCT REGISTRATION CARD : TARJETA DE REGISTRO : CARTE D'ENREGISTREMENT DU PRODUIT

**ONLINE OPTION:** Register online and save a stamp! You will be alerted of product updates and/or be sent new ECHO product information and special offers. Simply go to: **www.echo-usa.com**

**OPCIÓN POR INTERNET:** ¡Registrese en la pagina web y ahorre una estampilla! Le alertarán sobre actualizaciones del producto y/o se le enviara información sobre los nuevos productos ECHO y las ofertas especiales. Simplemente visite: **www.echo-usa.com**

**OPTION EN LIGNE :** Enregistrer en ligne et épargner un timbre! Vous serez informé sur les nouveaux produits ECHO et les mises à jour de produit ainsi que les offres spéciales. Simplement visitez le: **www.echo-usa.com**

**Please Print : Por Favor Enscriba Con Letra De Molde : En Lettre Carré S.V.P.**

**Confidential:** Information provided will not be shared or sold

| | | |
|---|---|---|
| *Purchaser's Name : Nombre del Comprador : Nom de l'acheteur* | | |
| *Address : Dirección : Adresse* | | |
| *City : Ciudad : Ville* | *State : Estado : Province* | *Zip Code : Código Postal : Code Postal* |
| *E-Mail Address : Dirección De Correo Electrónico : Courrier Électronique* | | |
| *Phone Number : Número De Teléfono : Téléphone* | *Date of Purchase : Fecha de la Compra : Date de l'achat* | |
| *Where Purchased : Nombre del Almacén donde fue Comprado : Lieu d'achat* | | |

| | |
|---|---|
| *Model Number : Numero del Modelo : No. de modéle* | *Serial Number : Numero de Serie : No. de série* |

Registering your purchase enables us to contact you in the unlikely event of a service update or product recall and verifies your ownership in the event of loss. : El registrar su compra nos permite estar en contacto con usted en caso de cualquier evento como el aviso de tiempo de servicio o la revocación del producto y verificación de propiedad en caso de robo o pérdida. : L'enregistrement de votre achat nous permettra de vous contacter dans le cas improbable de modifications des instructions d'entretien ou de rappel du produit et vérifier que vous êtes le propriétaire en cas de vol ou de perte.

Primary use of tool: ☐ Professional ☐ Homeowner ☐ Rental Equip.
Uso primario de la herramienta: ☐ Profesional ☐ Dueño de casa ☐ Alquiler
Usage principal : ☐ Professionnel ☐ Residential ☐ Location

Do you wish to receive periodic ECHO product information and special offers by e-mail? ☐ Yes ☐ No
¿Desea usted recibir información periódica y ofertas especiales por correo electronico sobre el producto ECHO? ☐ Yes ☐ No
Souhaitez-vous recevoir périodiquement de l'information sur les produits ECHO et les offres spéciales par courrier électronique ? ☐ Oui ☐ Non

Did you visit the ECHO website before purchasing your product?
☐ Yes ☐ No
Visitó usted la pagina web ECHO antes de comprar su producto?
☐ Si ☐ No
Avez-vous visité le site d'ECHO avant de procurer votre produit?
☐ Oui ☐ Non

What factor(s) most influenced your purchase?
☐ Performance ☐ Price ☐ Dealer
☐ Reliability ☐ Prior Experience ☐ Quality
☐ Friend/Family ☐ Brand ☐ Warranty

¿Qué factor(es) influenció más en su compra?
☐ Funcionamiento ☐ Precio ☐ Distribuidor
☐ Confiabilidad ☐ Experiencia Anterior ☐ Calidad
☐ Amigo/Familia ☐ Marca ☐ Garantía

Quel facteur (facteurs) vous a influencé le plus?
☐ Performance ☐ Prix ☐ Marchand
☐ Fiabilité ☐ Expérience ☐ Qualité
☐ Ami/Famille ☐ Marque ☐ Garantie

**ECHO Incorporated** 400 Oakwood Rd., Lake Zurich, IL 60047
1.800.432.ECHO WWW.ECHO-USA.COM

X7572270206 02-2012



© 11/23 ECHO Incorporated

# NOTES


© 11/23 ECHO Incorporated

© 11/23 ECHO Incorporated

U01313001001 - U01313999999
U01413001001 - U01413999999
U36013001001 - U36013999999
U67313001001 - U67313999999
U67513001001 - U67513999999
U74513001001 - U74513999999

**ECHO INCORPORATED**
400 Oakwood Road
Lake Zurich, IL 60047
**www.echo-usa.com**