Operator's Manual LM-2116SP LM-2116SPLN Mower

⚠ WARNING

This product contains chemicals known to the State of California to cause cancer, birth defects, or other reproductive harm. Cancer and Reproductive Harm www.P65Warnings.ca.gov

⚠ WARNING

Read and understand all provided literature before use. Failure to do so could result in series injury.

Note: This product complies with CAN ICES-002 / NMB-002

99922238535

© 09/2026 ECHO Incorporated

TABLE OF CONTENTS

Introduction....3
Servicing Information....3
Parts / Serial Number....3
Service....4
ECHO Consumer Product Support....4
Product Registration....4
Additional Literature....4
Engine Service....4
Safety Instructions....5
Manual Safety Symbols and Important Information....5
International Symbols....6
Lawn Mower Safety Warnings....7
Description....11
Contents....12
Assembly....13
Install the Handle....13
Mower Functions....15
Install the Grass Catcher....15
Install the Mulching Plug....16
Install the Side Discharge Chute....17
Set the Cutting Height....18
Prepare the Engine Before Starting....18
Check and Add Engine Oil....18
Gasoline....19
Operation....20
Starting the Engine....20
Stopping the Engine....21
SPEED ADAPT ® Self-Propel....21
Operating Tips....22
Maintenance....24
Maintenance Schedule....24
Adjusting the SPEED ADAPT ® Self-Propel....26
Cleaning the Air Filter....27
Replacing the Cutting Blades....27
Servicing the Engine....30
Troubleshooting....32
Storage Instructions....34
General Storage Instructions....34
Short-Term Storage (Less than 30 days)....35
Long-Term Storage (Over 30 Days)....35
Removing Mower from Storage....36
Transport....36
Disposal....37
Specifications....37
Product Registration....38
Warranty....40

© 09/2026 ECHO Incorporated

INTRODUCTION

Specifications, descriptions and illustrative material in this literature are as accurate as known at the time of publication, but are subject to change without notice. Illustrations may include optional equipment and accessories, and may not include all standard equipment.

Read and understand all provided literature. Literature contains specifications and information for safety, operation, maintenance, storage, and assembly specific to this product. Scan QR code for more information.

For additional literature, including safety manuals where applicable, or questions regarding terms used in this manual, visit:

https://www.echo-usa.com/manuals

SERVICING INFORMATION

Parts / Serial Number

Genuine ECHO Parts and Assemblies for your ECHO products are available only from an Authorized ECHO Dealer. When you do need to buy parts always have the Model Number and Serial Number of the unit with you. For future reference write them in the space provided below.

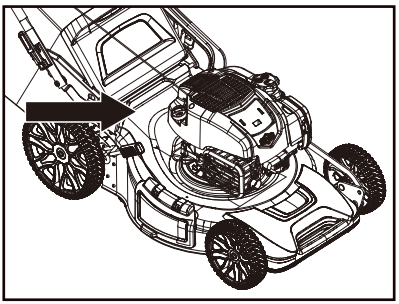

Model No. _____ Serial No. _____

© 09/2026 ECHO Incorporated

Service

Service of this product during the warranty period must be performed by an Authorized ECHO Service Dealer. For the name and address of the Authorized ECHO Service Dealer nearest you, ask your retailer or call: 1-800-432-ECHO (3246). Dealer information is also available on our Web Site www.echo-usa.com. When presenting your unit for Warranty service/ repairs, proof of purchase is required.

ECHO Consumer Product Support

If you require assistance or have questions concerning the application, operation, or maintenance of this product, call the ECHO Consumer Product Support Department at 1-800-432-ECHO (3246) from 8:00 am to 5:00 pm (Central Standard Time) Monday through Friday. Before calling, please know the model and serial number of your unit.

Product Registration

Register your ECHO equipment online at www.echo-usa.com or by filling out the product registration sheet included in this manual. Registering your product confirms warranty coverage and provides a direct link to ECHO if we find it necessary to contact you.

Additional Literature

In addition to finding information online, information is available from your Authorized ECHO Service Dealer, or by contacting ECHO Incorporated, 400 Oakwood Road, Lake Zurich, IL 60047, 1-800-432-ECHO (3246).

Engine Service

See separate engine manual for information on engine service, parts, and warranty.

© 09/2026 ECHO Incorporated

SAFETY INSTRUCTIONS

Manual Safety Symbols and Important Information

Throughout this manual and on the product itself, you will find safety alerts and helpful informational messages preceded by symbols or key words. The following is an explanation of those symbols and key words and what they mean to you.

DANGER

The safety alert symbol accompanied by the word "DANGER" calls attention to an act or condition which WILL lead to serious personal injury or death if not avoided.

WARNING

The safety alert symbol accompanied by the word "WARNING" calls attention to an act or condition which CAN lead to serious personal injury or death if not avoided.

CAUTION

The safety alert symbol accompanied by the word "CAUTION" calls attention to an act or condition which might lead to minor or moderate personal injury if not avoided.

NOTICE

The enclosed message provides information necessary for the protection of the unit.

Note: This enclosed message provides tips for use, care and maintenance of the unit.

© 09/2026 ECHO Incorporated

International Symbols

Some of the following symbols may be used on this product. Please study them and learn their meaning. Proper interpretation of these symbols will allow you to operate the product better and safer.

Symbol	Description
	Safety alert symbol
	Read operator's manual.
	Maintain safety devices. Do not open or remove safety shields while engine is running.
	Keep bystanders away.
	Look behind while backing up.
	Avoid steep slopes. Use extra caution on slopes.
	Beware of thrown objects. Remove objects that can be thrown by the blade in any direction. Wear safety glasses.
	Keep hands and feet away from blade.
	Wear eye protection.
	Disconnect the spark plug before performing any service on the machine.
	Tortoise: Slow self-propel drive speed
	Hare: Fast self-propel drive speed
	Do not store in the vertical position.

© 09/2026 ECHO Incorporated

Lawn Mower Safety Warnings

⚠ WARNING

Read all safety warnings, instructions, illustrations, and specifications provided with this lawnmower. Failure to follow all instructions listed below may result in electric shock, fire, and/or serious injury.

Save all warnings and instructions for future reference.

General Safety

- **Operators must read, understand, and follow all instructions and warnings in this manual and on the mower, engine, and attachments.**
- **For more information about engine preparation and operation refer to engine manual.**
- **Only allow operators who are responsible, trained, and physically capable to operate the machine.**
- **Do not operate under the influence of alcohol or drugs.**
- **Do not use the lawn mower as a drive unit for other work tools or toolkits of any kind.**
- **Avoid mowing wet grass.** *Poor footing could cause a slip and fall accident.*
- **Do not use the lawnmower in bad weather conditions, especially when there is a risk of lightning.**
- **Do not operate under any condition where traction, turning or stability is in question.** *Tires could slide even if stopped.*
- **Do not carry passengers and keep bystanders away.**
- **Follow the manufacturer's recommendation for wheel weights or counterweights.**

To Reduce the Risk of Bodily Injury, Do Not Use the Lawn Mower to:

- **Trim bushes, hedges or shrubs.**
- **Cut scaling vegetation, planted roofs, or balcony grown grass.**
- **Clean dirt and debris from walkways.**
- **Chop up tree or hedge clippings.**
- **Level out high areas such as molehills.**

Fuel and Fire Hazards

- **Use extra care handling gasoline and other fuels.**
  They are flammable and the vapors are explosive.

© 09/2026 ECHO Incorporated

- **Always extinguish all cigarettes, cigars, pipes, and other sources of ignition.**
- **Use only an approved fuel container.**
- **Do not remove fuel cap or add fuel with the engine running or while hot.**
- **Do not refuel indoors or in enclosed spaces.**
- **Allow machine to cool before storing.**

⚠ WARNING

Do not refuel or store the mower or fuel container near an open flame, pilot light, or sparks; or near any possible sources which may cause these, such as power tools, a water heater, space heater, furnace, clothes dryer, etc.

- **If fuel is spilled, avoid creating any source of ignition.** *Do not attempt to start the engine until fuel vapors have dissipated.*
- **To reduce risk of fire, keep machine free of grass, leaves or other debris buildup; clean up oil or fuel spillage and remove any fuel soaked debris.**

Before Operating

- **Wear appropriate personal protective equipment such as safety glasses, hearing protection, and slip-resistant foot protection.**
- **Clear the area of any objects (e.g., stones, sticks, toys) which could be thrown by the mower or interfere with operation.**
- **Keep the area clear of all bystanders, including children and pets.** *Stop the machine if anyone enters the area.*
- **Ensure the entire grass catcher, discharge chute, or other safety devices are in place and functioning properly before operating the mower.** *Check these parts frequently for signs of wear or deterioration and replace as needed.*

During Operation

- **Only operate in well ventilated areas.** *Exhaust gases contain carbon monoxide, a deadly poison.*
- **Only operate in daylight or with other adequate lighting.**
- **Avoid holes, ruts, bumps, rocks, or other hidden hazards.** *Uneven terrain could overturn the machine, or cause operator to lose balance or footing.*
- **Do not put hands or feet near rotating parts or under the machine.** *Keep clear of discharge opening at all times.*

© 09/2026 ECHO Incorporated

- **Do not direct discharge material toward anyone.** *Avoid discharging material against a wall or obstruction. Material may ricochet back toward the operator or others.*
- **Stop the blade when crossing gravel surfaces.**
- **Do not leave a running machine unattended.** *Always stop the mower on level ground and turn off engine.*
- **Do not mow in reverse unless absolutely necessary.** *In this case, always look down and behind you – both before and while moving backwards – for small children, pets, or obstacles.*
- **If you strike a foreign object, stop and inspect the machine.** *Repair, if necessary, before restarting.*
- **Operation of this equipment may create sparks that can start fires around dry vegetation. A spark arrestor may be required. The operator should contact local fire agencies for laws or regulations relating to fire prevention requirements.** *If required, contact engine manufacturer to obtain optional spark arrestor.*
- **This machine is capable of amputating hands and feet and throwing objects.** *Failure to observe all safety instructions could result in serious injury or death.*

Operating on Slopes

- **Slopes are a major factor related to accidents.** *Operation on slopes requires extra caution.*
- **Mow across the face of slopes: NEVER up and down.** *Exercise extreme caution when changing direction on slopes.*
- **Use extreme caution while operating near drop-offs.**
- **Do not operate machine under any condition where traction, turning, or stability is in question.** *Tires could slide even if stopped.*
- **Always keep the machine in gear when going down slopes.** *Do not coast downhill.*
- **Avoid starting and stopping on slopes.** *Avoid making sudden changes in speed or direction. Make turns slowly and gradually.*
- **Use extra care while operating machine with a grass catcher or other attachment(s).***They can affect the stability of the machine.*

Children

- **Children are often attracted to the machine and the mowing activity.** *Tragic accidents can occur if the operator is not alert to the presence of children.*
- **Never assume that children will remain where you last saw them.**
- **Keep children out of the area and under the watchful care of a responsible adult other than the operator.**

© 09/2026 ECHO Incorporated

Hauling

- **Use full-width ramps for loading and unloading lawn mower for transport.**

Service

- **Disconnect the spark plug wire before making any repairs.**
- **Keep machine in good working order. Replace worn or damaged parts.**
- **Check grass catcher components and the discharge chute frequently and replace with manufacturer's recommended parts, when necessary.**
- **Use caution when servicing the blade.** *Wrap blades or wear appropriate gloves. Replace damaged blade. Do not repair or alter blades.*
- **Keep all nuts and bolts tight to ensure the equipment is in safe working condition.**
- **NEVER remove or tamper with any safety devices.** *Check their proper operation regularly. NEVER do anything to interfere with the function of a safety device or to reduce the protection offered by the safety device.*
- **NEVER attempt to make any adjustments or repairs while the engine is running.** *Disconnect the spark plug wire to prevent unintended starting.*

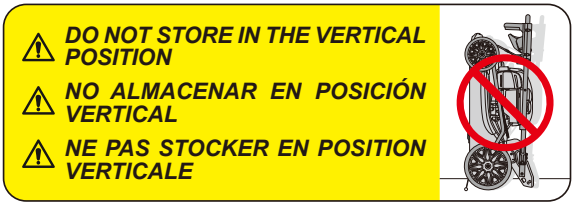

© 09/2026 ECHO Incorporated

DESCRIPTION

Compare the illustrations with your lawn mower to familiarize yourself with the locations of various controls and adjustments.

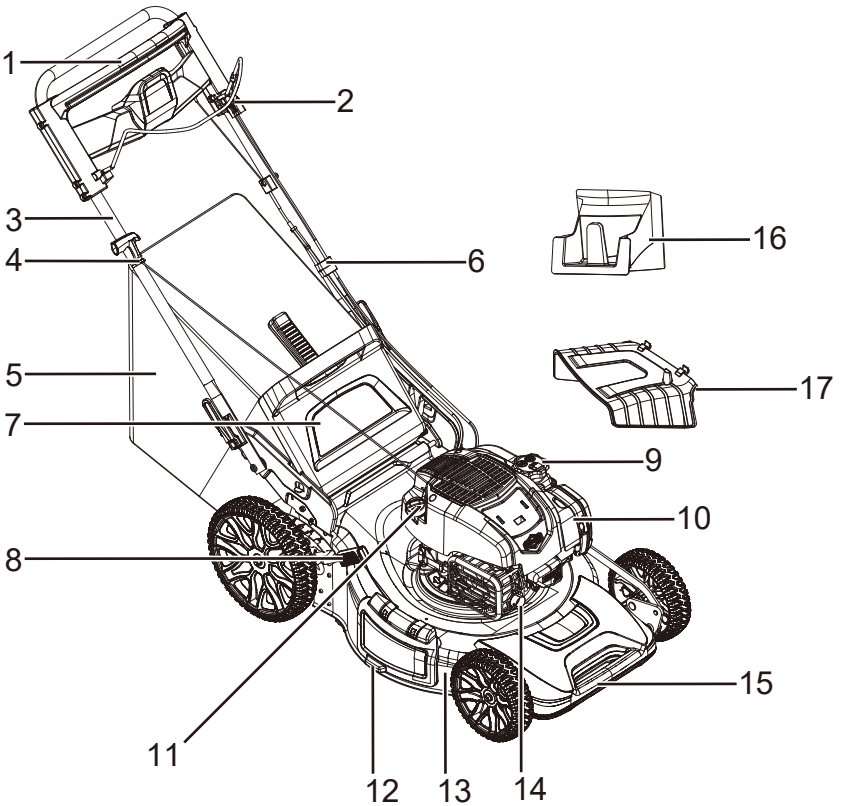

1. Self-propel control handle
2. Brake control handle
3. Handle bar
4. Starter handle
5. Grass catcher bag
6. Cable clamp
7. Rear cover
8. Height adjustment lever
9. Fuel tank cap
10. Air filter
11. Engine oil cap with dipstick
12. Side discharge deflector
13. Housing
14. Muffler
15. Carrying handle
16. Mulching plug
17. Side discharge chute

© 09/2026 ECHO Incorporated

CONTENTS

This lawn mower is shipped without gas or oil in the engine.
The ECHO product you purchased has been factory pre-assembled for your convenience. Due to packaging restrictions, some assembly may be necessary. To ensure safe and proper operation, all parts and hardware must be assembled as instructed using appropriate tools to ensure proper tightness. After opening the carton, check for damage. Immediately notify your retailer or ECHO Dealer of damaged or missing parts. Use the contents list to check for missing parts.

Packing list:	QTY
Lawn mower	1
Side discharge chute	1
Grass catcher bag	1
Bottle of engine oil	1
Mower operator's manual	1
Engine operator's manual	1

Remove Lawn Mower from Box

1. Cut down two end corners of box and lay end panel down flat.
2. Carefully remove all packing materials EXCEPT padding that is intended for anti-friction and shock absorption.
3. Roll lawn mower out of box and check box thoroughly for additional loose parts.

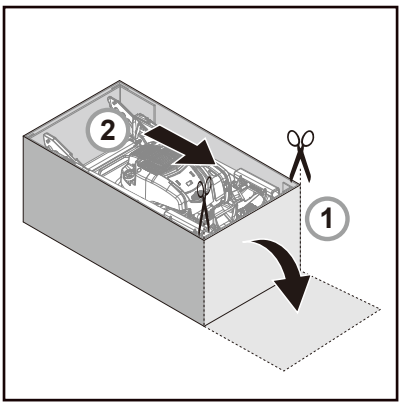

© 09/2026 ECHO Incorporated

ASSEMBLY

Install the Handle

NOTICE

Unfold handle carefully to avoid pinching or damaging the control cables.

1. Raise handle from folding position to working position.

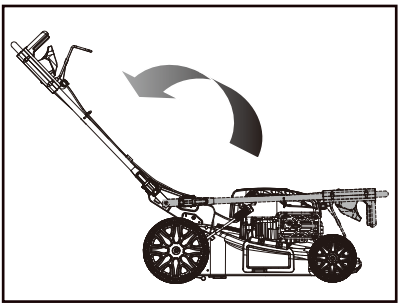

2. Hold down the side bars on both sides of the handle, align with the holes on the sides of machine and release the side bars so that the cylinder latches on the side bars are fixed through the two holes.
3. Push the handle bar to ensure it is locked in place.

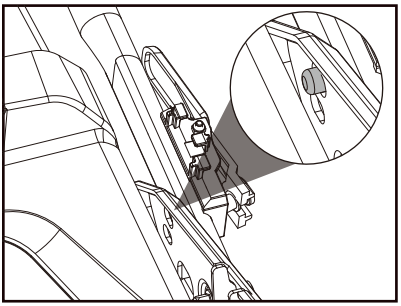

NOTE: The two holes on the brackets correspond to two heights of the handle bar. Make choices according to your body size.

© 09/2026 ECHO Incorporated

3. Attach the cable to the cable clamp and then attach the cable clamp to the position shown.

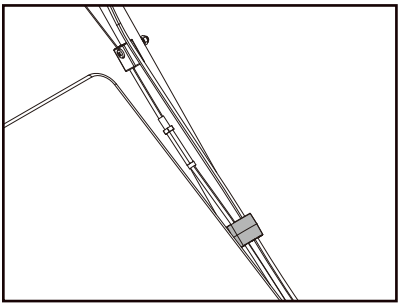

4. Slip starter handle into loop on handle bar.

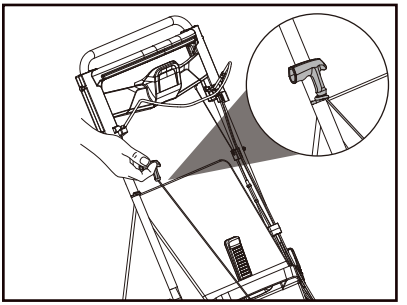

© 09/2026 ECHO Incorporated

Mower Functions

This lawn mower functions three ways: rear bagging, mulching, and side discharging. Each function requires different accessories. See table for accessory usage by function.

To Convert Mower	Mulching plug	Grass Bag	Side Discharge Chute
For rear bagging	×	√	×
For mulching	√	×	×
For side discharging	√	×	√

Install the Grass Catcher

NOTICE

Ensure both the side discharge chute and mulching plug are removed from the mower when installing the grass catcher.

1. Raise the rear cover.
2. Install the grass catcher on rear of mower from top down.
3. Ensure the columns on both sides of the grass catcher are stuck in the grooves.
4. Lower the rear cover.

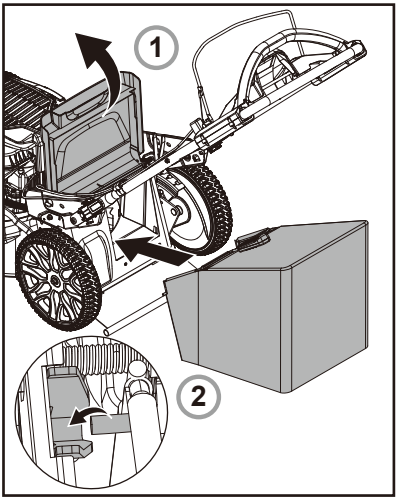

© 09/2026 ECHO Incorporated

Install the Mulching Plug

WARNING

Install mulching plug to recycle lawn clippings. Failure to do so allows objects to be thrown toward you or bystanders or contact with the blades could occur. Thrown objects or blade contact can cause serious injury or death.

NOTICE

Ensure both side discharge chute and grass catcher are removed from the mower before installing the mulching plug.

1. Raise the rear cover (7).
2. Install the mulching plug (16) into the rear discharge chute until the latch locks into place.
3. Lower the rear cover.

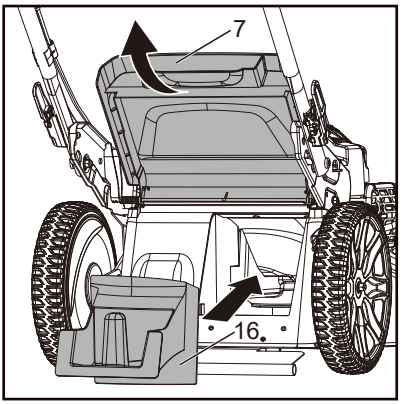

© 09/2026 ECHO Incorporated

Install the Side Discharge Chute

NOTICE

Ensure that the grass catcher is removed from the mower, and the mulching plug is installed in the mower to use the side discharge chute.

1. Open the side discharge deflector (12).
2. Install the side discharge chute (17) under the deflector.

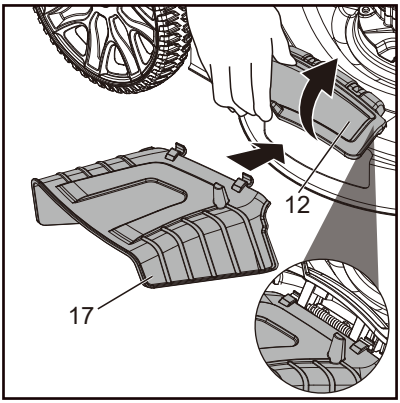

© 09/2026 ECHO Incorporated

Set the Mowing Cutting Height

WARNING

Contact with a moving blade can cause severe personal injury. Stop engine and ensure blade has come to a complete stop before adjusting height.

Adjust the cutting height to suit your requirements. The middle position is suitable for most lawns. Raise the wheels for low cut and lower the wheels for a high cut.

1. The height of the blade can be adjusted to seven height positions from 1.25 in to 4 in (32 mm-102 mm).
2. To change the cutting height, pull the height adjustment lever toward the wheel.
3. Move the lever and wheel up or down to the desired position, release the lever to lock the wheel in position.

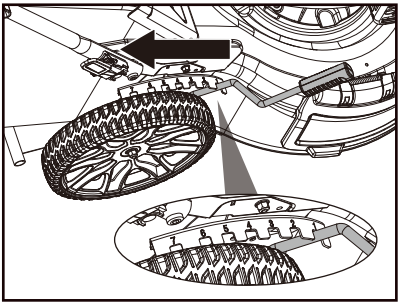

PREPARE THE ENGINE BEFORE STARTING

Check and Add Engine Oil

NOTICE

Running the engine without sufficient oil will cause damage to engine. Check oil level before each use. Add oil if needed. Fill to full line on dipstick.Do not overfill engine with oil, or it will smoke heavily from the muffler on startup.

1. Be sure lawnmower is leveled.
2. Remove oil dipstick from oil fill spout.
3. Slowly pour oil into the engine through the engine oil fill spout.
4. Pour oil slowly. Do not overfill. Wait one minute to allow oil to settle. Insert and tighten dipstick, then remove it to check oil level.

© 09/2026 ECHO Incorporated

Gasoline

⚠ CAUTION

Wipe off any spilled oil or fuel. Do not store, spill or use gasoline near an open flame.

- **Fill fuel tank to bottom of tank filler neck. Do not overfill. Use fresh, clean, regular unleaded gasoline with a minimum of 87 octane. Gasoline with up to 10% ethanol "E10 rating" is acceptable.**
- **DO NOT USE gasoline with an ethanol rating higher than E10 in your mower. Doing so could cause damage to your mower's engine.**
- **Purchase fuel in quantities that can be used within 30 days to assure fuel freshness.**
- **DO NOT mix oil with gasoline.**

Alcohol blended fuels, called gasohol, ethanol or methanol, can attract moisture which leads to separation and formation of acids during storage. Acidic gas can damage the fuel system of an engine while in storage. To avoid engine problems, the fuel system should be emptied before storage of 30 days or longer. Empty the fuel tank, start the engine and let it run until the fuel lines and carburetor are empty. Use fresh fuel next season. NEVER use engine or carburetor cleaner products or permanent damage may occur.

© 09/2026 ECHO Incorporated

OPERATION

Starting the Engine

WARNING

Blades and other rotating parts can cause serious personal injury. Start the engine according to instructions, on a level surface free of grass and obstacles. Keep hands and feet away from the blade and other rotating parts, and do not stand in front of discharge chute.

1. The unit is equipped with a rubber boot over the end of the spark plug. Ensure the metal loop on the end of the spark plug wire (inside the rubber boot) is fastened securely over the metal tip on the spark plug.
2. Hold the brake control handle against the self-propel control handle.
   NOTE: Do not push the self-propel control handle down when starting the engine.
3. Pull the starter handle slowly until you feel resistance, then pull it quickly. Return it slowly to the loop after engine starts.

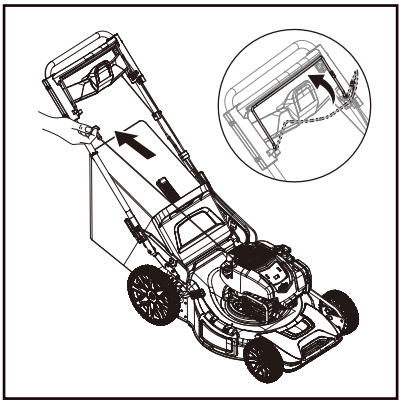

© 09/2026 ECHO Incorporated

Stopping the Engine

DANGER

The blade continues to rotate for a few seconds after the engine is shut off. Contact with a moving blade can cause severe personal injury. Avoid all contact with rotating blade.

1. Release the brake control handle to stop the engine and blade.
2. Disconnect the spark plug wire as instructed in the separate engine manual to prevent accidental starting while equipment is unattended.

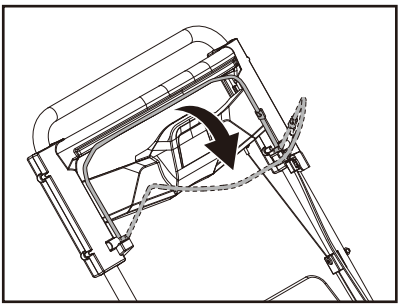

SPEED ADAPT ® Self-Propel

Use the SPEED ADAPT ® self-propel function to assist operation.
The rear wheels are automatically driven by the engine. Do not push the mower manually. Adjust mower speed by pushing self-propel control handle.
The adjustable speed range is within 0-3.5 mph (0-5.6 km/h).

1. When the engine is running, push the self-propel control handle down to engage the wheels. Further pressure on the control handle will increase the mower travel speed. Reduced pressure on the control handle will decrease mower travel speed.
2. Release the self-propel control handle to disengage the wheels.

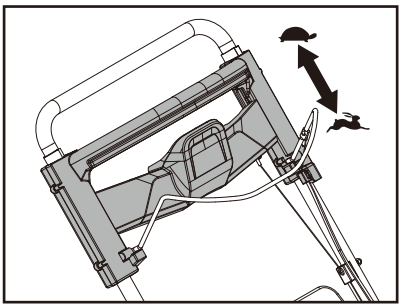

NOTE: You can self-propel the machine with the blades engaged.

© 09/2026 ECHO Incorporated

⚠ CAUTION

The mower is designed to cut normal residential grass with a height of no more than 9.8 in (250 mm). Do not attempt to mow through unusually tall dry or wet grass (e.g., pasture) or piles of dry leaves. Debris may build up on the mower deck or contact the engine exhaust presenting a potential fire hazard.

Operating Tips

General Tips

- Inspect the area where you will use the machine and remove all objects that the machine could throw.
- Avoid striking solid objects with the blades. Never deliberately mow over any object.
- If the machine strikes an object or starts to vibrate, immediately shut off the engine, wait for all moving parts to stop, disconnect spark plug wire from the spark plug, and examine the machine for damage.
- For best performance, install new blades before the cutting season begins or when necessary.

Operate on Slopes

⚠ WARNING

Unsafe mowing on slopes can cause severe personal injury. Do not mow on slopes with incline more than 15 degrees. If you are not comfortable, do not mow on a slope. Keep a low self-propelled speed when you mow on a slope.

- Do not go up and down on a slope, mow across the face of the slope. Be careful when you change direction on a slope.
- Monitor the holes, ruts, rocks, and other hidden objects that can cause you to fall. Remove all obstacles such as rocks and tree limbs.
- Ensure that your footing is stable. If you are out of balance, release the brake control handle immediately.
- Do not mow near drop-offs, ditches, or embankments.

© 09/2026 ECHO Incorporated

Empty the Grass Catcher

1. Stop the machine, and wait until blade is stopped.
2. Open the rear cover.
3. Hold the grass catcher by its handle and unhook it from the mower.
4. Close the rear cover.
5. Empty the grass catcher.

Mowing Tips

Under certain conditions, such as very tall grass, it may be necessary to raise the cutting height to reduce pushing effort and to keep from overloading the engine and leaving clumps of grass clippings. It may also be necessary to reduce ground speed and/or run the lawn mower over the area a second time.

- For extremely heavy cutting, reduce the width of cut by overlapping previously cut path and mow slowly.
- Keep top of engine around starter clear and clean of grass clippings and chaff. This will help engine air flow and extend engine life.
- Alternate the mowing direction. This helps disperse the grass clippings over the lawn for even fertilization.

Mulching Tips

NOTE: For best performance, keep mower housing free of built-up grass. See "Cleaning the Deck and Cutting Blades" in the Maintenance section of the operator's manual.

- In mulching mode, the blade will re-cut the grass clippings many times, reducing them in size so they are dispersed into the lawn and will be less noticeable than full length clippings. Mulched grass will biodegrade quickly to provide nutrients for the lawn.
- Avoid cutting wet grass, which tends to form clumps and interfere with the mulching action.
- For best results, adjust the lawn mower cutting height so that the lawn mower cuts off only the top one-third of the grass blades.
- If the lawn is overgrown, raise the cutting height to reduce pushing effort and to keep from overloading the engine and leaving clumps of mulched grass. For extremely heavy mulching, reduce your width of cut by overlapping previously cut path and mow slowly.
- Certain types of grass and grass conditions may require that an area be mulched a second time to completely hide the clippings. When doing a second cut, mow across to the first cut path.
- Change your cutting pattern from week to week. Mow north to south one week, then east to west the next week. This will help prevent matting and graining of the lawn.

© 09/2026 ECHO Incorporated

MAINTENANCE

WARNING

Moving parts can amputate fingers or cause severe injuries. Keep hands, clothing and loose objects away from all openings. Always stop unit, disconnect spark plug, and make sure all moving parts have come to a complete stop before removing obstructions, clearing debris, or servicing unit. Allow the unit to cool before performing maintenance or adjustments. Wear gloves to protect hands from sharp edges and hot surfaces.

WARNING

Operating a poorly maintained unit can result in serious injuries to operator or bystanders. Always follow all maintenance instructions as written, otherwise serious personal injury can result.

WARNING

Use only approved replacement components. Serious injury may result from the use of a non-approved replacement components.

Maintenance Schedule
Good maintenance is essential for safe, economical and trouble-free operation.

NOTICE

Refer to engine operator's manual for detailed engine maintenance schedule.

Follow the inspection and maintenance recommendations and schedules in this manual.

© 09/2026 ECHO Incorporated

	Before each use	After each use	Every 25 hours or season	Every 100 hours	Before storage
Check for loose fasteners	X				X
Check wheel	X				
Clean lawn mower		X			X
Check/sharpen/ replace blade			X[1]		
Lubrication			X		
Check engine oil level	X				
Change engine oil			X[2,3]		
Clean air filter			X[3]		
Inspect muffler			X		
Replace spark plug					
Empty fuel system				X	X
Adjust the self-propel			X	X	

X[1]. Replace blades more often when mowing in sandy soil.

X[2]. Change more often when operating under a heavy load or in high ambient temperatures.

X[3]. Service more often when operating in dirty or dusty conditions.

© 09/2026 ECHO Incorporated

Adjusting the SPEED ADAPT ® Self-Propel

NOTICE

Proper tension is important for the SPEED ADAPT ® self-propel system to function as intended. Check the amount of tension and adjust accordingly.

If self-propel control handle does not return to original position when released, adjust self-propel cable.

1. To increase cable tension or remove the cable slack, turn the cable adjuster (19) down to shorten the cable.
2. To decrease cable tension or add cable slack, turn the cable adjuster (19) up to extend the cable.

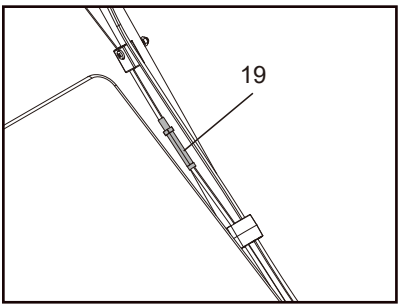

NOTE: Under normal conditions, the control cables have minimal slack when self-propel control handle is not engaged. The handle will spontaneously return to its original or highest position when it is released.

© 09/2026 ECHO Incorporated

Cleaning the Air Filter

NOTICE

Do not spray water on the engine. Water can damage engine or contaminate the fuel system.

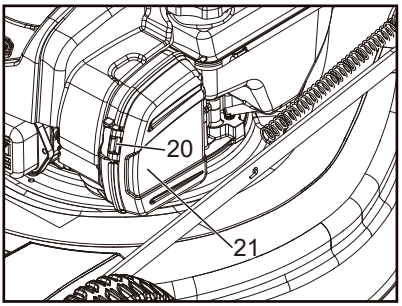

1. Open latch (20) and open air filter cover (21) on the air filter cover .
2. Remove the filter element.
3. To loosen debris, gently tap the filter on a hard surface. If the filter is excessively dirty, replace with a new filter.
4. Install the filter element into the air filter case.
5. Close the air filter cover and secure latch.

Replacing the Cutting Blades

⚠ WARNING

A blade that is bent or damaged could break apart and could cause injury or death. Inspect the blades periodically for wear or damage. Replace if needed.

⚠ WARNING

Blades are very sharp. Touching them may lead to severe personal injury. Avoid touching blades whenever possible, and always wear gloves to protect hands.

⚠ WARNING

Be sure to disconnect the spark plug wire before working on the cutting blade to prevent accidental engine starting.

© 09/2026 ECHO Incorporated

⚠ WARNING

A damaged blade adapter could cause serious injuries to operator or bystanders. Periodically inspect the blade adapter for cracks, especially if you strike a foreign object.

⚠ WARNING

Do not lift the machine vertically. Oil or fuel leakage is a fire hazard and damage the engine.

⚠ WARNING

Incorrect blade installation can cause severe personal injury.

NOTICE

For best results your blade should be sharp. The blade may be resharpened by removing it and either grinding or filing the cutting edge keeping as close to the original bevel as possible. Always sharpen cutting edges equally to prevent blade imbalance. Improper blade balance will result in excessive vibration causing eventual damage to the engine and mower. Be sure to carefully balance blade after sharpening. Before reassembling the blade assembly and the blade adapter plate to the unit, lubricate the engine crankshaft and the inner surface of the blade adapter with light oil. After prolonged use, especially in sandy soil conditions, the blade will become worn and lose some of the original shape. Cutting efficiency will be reduced and the blade should be replaced. Replace with an approved factory replacement blade only.

© 09/2026 ECHO Incorporated

1. Turn the mower on its side and ensure mower is oriented so that air filter points up.
2. Make the blade perpendicular to the ground and use a wood block to prevent the blade(22) from rotating.
3. Use a 17 mm wrench to remove hex bolt (25) and washer (24). Then remove blade and blade adapter plate (23) from crankshaft.
4. Sharpen the cutting blade or replace the cutting blade with the same type.

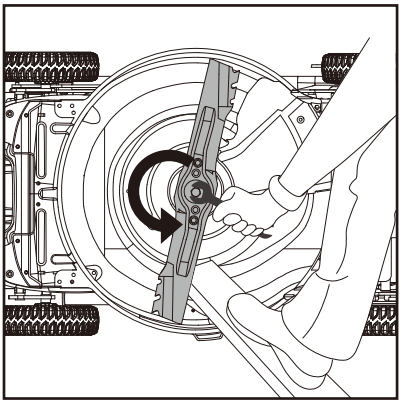

NOTE: Loosen the bolt in counterclockwise direction.

5. Install the blade (22) onto the blade adapter (26) to prevent imbalance and install the blade adapter plate (23) on the crankshaft.
6. Align the washer (24) over the blade and insert the hex bolt (25).Tighten the hex bolt to the torque 48 N.m-52 N.m (35 lbf.ft-38 lbf.ft) .

NOTE: Tighten the bolt in clockwise direction.

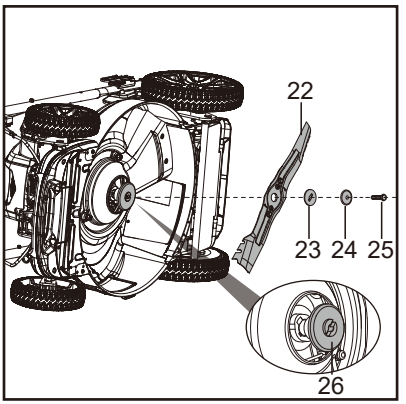

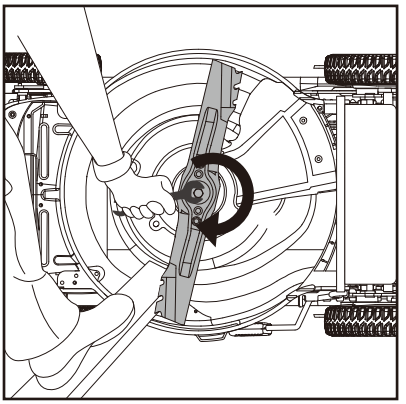

© 09/2026 ECHO Incorporated

Replacement Blade

- For best results, replace the blade with the recommended blades: 99988806003. If not , it will affect the health and safety of the operator.
- For further assistance with replacing or sharpening blades, please contact our customer service at 1-800-432-ECHO (3246) or visit https://www.echo-usa.com/manuals.

Blade Mounting Torque

- ALL nuts and bolts must be checked periodically for correct tightness.

Servicing the Engine

Refer to the separate engine manual for engine maintenance instructions.

WARNING

Contact with a moving blade can cause severe personal injury. Avoid all contact with rotating blade.

© 09/2026 ECHO Incorporated

© 09/2026 ECHO Incorporated

TROUBLESHOOTING

Problem	Cause	Solution
Engine does not start.	Fuel tank is empty.	Fill tank with fuel. Refer to engine owner's manual.
	Air filter element is dirty.	Clean air filter element. Refer to engine owner's manual.
	Spark plug loose.	Tighten spark plug. Refer to engine owner's manual.
	Spark plug cable loose or disconnected from plug.	Install spark plug cable on spark plug. Refer to engine owner's manual.
	Spark plug gap is incorrect.	Set gap between electrodes. Refer to engine owner's manual.
	Spark plug is defective.	Install new, correctly gapped plug. Refer to engine owner's manual.
	Carburetor is flooded with fuel.	Remove air filter element and pull starter handle continuously until carburetor clears itself and install air filter element.
	Faulty ignition module.	Contact the engine manufacturer.
Engine difficult to start or loses power.	Dirt, water, or stale fuel in tank.	Drain fuel and clean tank. Fill tank with clean, fresh fuel.
	Vent hole in fuel tank cap is plugged.	Clean or replace fuel tank cap.
	Air filter element is dirty.	Clean air filter element.

© 09/2026 ECHO Incorporated

Engine operates erratically.	Spark plug is defective.	Install new, correctly gapped plug. Refer to engine owner's manual.
	Spark plug gap is incorrect.	Set gap between electrodes. Refer to engine owner's manual.
	Air filter element is dirty.	Clean air filter element. Refer to engine owner's manual.
Engine idles poorly.	Air filter element is dirty.	Clean air filter element. Refer to engine owner's manual.
	Air slots in engine shroud are blocked.	Remove debris from slots.
	Cooling fins and air passages under engine blower housing are blocked.	Remove debris from cooling fins and air passages.
Engine skips at high speed.	Gap between electrodes of spark plug is too close.	Set gap between electrodes. Refer to engine owner's manual.
Engine overheats.	Cooling air flow is restricted.	Remove any debris from slots in shroud, blower housing, air passages.
	Incorrect spark plug.	Install spark plug and cooling fins on engine.
Mower vibrates abnormally.	Cutting assembly is loose.	Tighten blade.
	Cutting assembly is unbalanced due to uneven sharpening.	Remove the blade and grind or file the cutting edge keeping as close to the original bevel as possible to balance blade.
SPEED ADAPT ® Self-propel function does not work.	The self-propel control cable has too much slack.	Adjust the cable tension.

© 09/2026 ECHO Incorporated

STORAGE INSTRUCTIONS

General Storage Instructions

DANGER

Fire hazard. Fuel is flammable. Accidental ignition can cause serious personal injury. Use extreme care when mixing, storing, draining or handling fuel. Do not drain gasoline in closed rooms or in proximity to open flames. Do not smoke around fuel.

DANGER

Fire hazard. Fuel fumes are flammable. Open flames or sparks can ignite fuel fumes causing serious personal injury. Do not store in enclosure where fuel fumes may accumulate or reach an open flame or spark.

CAUTION

Machine remains hot after use. Touching hot surfaces can cause personal injury. Allow hot engine to cool for at least 30 minutes before cleaning.

NOTICE

Stored fuel ages. Old fuel in the fuel tank is the leading cause of hard starting. Do not store fuel without fuel stabilizer more than 30 days. Add fuel stabilizer such as ECHO Red Armor® Fuel Treatment, as directed on the label, to fresh fuel only. Do not store stabilized fuel beyond the duration recommended by the fuel stabilizer manufacturer.

NOTICE

Do not use garden hose or pressure washing equipment to clean engine. These can force water into air filter or muffler and damage engine.

NOTICE

When storing the mower in an unventilated storage shed, coat the equipment, especially cables and all moving parts, with light oil or silicone.

© 09/2026 ECHO Incorporated

NOTICE

Always store unit level on a flat surface.

- Store the machine in a dry, clean and frost-protected place, out of reach of unauthorized persons. Never store the mower near an open flame, pilot light or sparks, or near any possible source which may cause these, such as power tools, a water heater, furnace, etc.
- Carefully clean machine parts and accessories after each use and before storage.
- Lightly grease the cutting area to avoid corrosion.
- Do not kink or bend cables.

Short-Term Storage (Less than 30 days)

- Remove and empty the grass catcher.
- With the engine and exhaust system cool, cover the engine to keep out dust. A hot engine and exhaust system can ignite or melt some materials.
- Do not use plastic sheeting as a dust cover. A non-porous cover will trap moisture around the engine, promoting rust and corrosion.

Long-Term Storage (Over 30 Days)

Note: Dispose of any unused fuel properly. Recycle it according to local codes or use it in your automobile.

1. Remove and empty the grass catcher.
2. Run the mower until the engine shuts off from running out of fuel.
3. Start the engine again and allow it to run until it shuts off. When you can no longer start the engine, it is sufficiently dry.
4. Disconnect the cable from the spark plug.
5. Remove the spark plug, add 30 ml (1 fl oz) of engine oil through the spark plug hole, and pull the starter rope slowly several times to distribute oil throughout the cylinder to prevent cylinder corrosion.
6. Loosely install the spark plug.
7. Check and tighten all fasteners.

© 09/2026 ECHO Incorporated

Removing Mower from Storage

- Check and tighten all fasteners.
- Remove spark plug and pull recoil starter handle to blow excess oil from cylinder.
- Install spark plug and connect spark plug cable.
- Fill fuel tank with fresh gasoline.

TRANSPORT

DANGER

The fuel tank must be empty. Spilled fuel or fuel vapor may ignite.

CAUTION

Let the engine cool down before transporting the machine.

NOTICE

When moving the machine, the blade must be disengaged and the cutting deck raised as high as possible. Disengage the blade before crossing surfaces other than grass.

1. Empty the fuel tank before transporting the machine.
2. Empty the fuel tank with a suction pump. Start the engine and let it run until it has used up all remaining gasoline.
3. Close the fuel cap firmly.
4. Let the engine cool down before transporting.
5. Take care not to drop or strike the machine when transporting.
6. Tie down the machine securely in an upright position while transporting.
7. Take care not to strike the machine when transporting. Do not place objects on the machine.

© 09/2026 ECHO Incorporated

DISPOSAL

Check and follow local regulations for disposal or recycling of gasoline, oil, or other hazardous fluids.

SPECIFICATIONS

MODEL	LM-2116SPLN	LM-2116SP
Engine Type	Briggs & Stratton EXi725-QPT	Briggs & Stratton EXi725
Engine Displacement	163 cc	163 cc
Blade Width	510 mm (20 in)	510 mm (20 in)
Rated Speed	2850 rpm	3100 rpm
Bag Capacity	81 L (2.3 bushel)	81 L (2.3 bushel)
Net Weight	33.6 kg (74.1 lbs)	33.6 kg (74.1 lbs)
Height Adjustment	32 mm-102 mm (1.25 in – 4 in) 7 height positions	32 mm-102 mm (1.25 in – 4 in) 7 height positions

© 09/2026 ECHO Incorporated

PRODUCT REGISTRATION

Thank you for choosing ECHO Power Equipment

Please go to http://www.echo-usa.com/Warranty/Register-Your-ECHO to register your new product online. It's FAST and EASY! NOTE: your information will never be sold or misused by ECHO, Incorporated.

Registering your purchase enables us to contact you in the unlikely event of a service update or product recall, and verifies your ownership for warranty consideration.

If you do not have access to the Internet, you can complete the form below and mail to:

ECHO Incorporated, Product Registration, PO Box 1139,
Lake Zurich, IL 60047.

© 09/2026 ECHO Incorporated

PRODUCT REGISTRATION CARD : TARJETA DE REGISTRO : CARTE D'ENREGISTREMENT DU PRODUIT

ONLINE OPTION: Register online and save a stamp! You will be alerted of product updates and/or be sent new ECHO product information and special offers. Simply go to: **www.echo-usa.com**

OPCIÓN POR INTERNET: ¡Registrese en la pagina web y ahorre una estampilla! Le alertarán sobre actualizaciones del producto y/o se le enviara información sobre los nuevos productos ECHO y las ofertas especiales. Simplemente visite: **www.echo-usa.com**

OPTION EN LIGNE : Enregistrer en ligne et épargner un timbre! Vous serez informé sur les nouveaux produits ECHO et les mises à jour de produit ainsi que les offres spéciales. Simplement visitez le: **www.echo-usa.com**

Please Print : Por Favor Enscriba Con Letra De Molde : En Lettre Carré S.V.P.

Confidential: Information provided will not be shared or sold

Purchaser's Name : Nombre del Comprador : Nom de l'acheteur		
Address : Dirección : Adresse		
City : Ciudad : Ville	*State : Estado : Province*	*Zip Code : Código Postal : Code Postal*
E-Mail Address : Dirección De Correo Electrónico : Courrier Électronique		
Phone Number : Número De Teléfono : Téléphone	*Date of Purchase : Fecha de la Compra : Date de l'achat*	
Where Purchased : Nombre del Almacén donde fue Comprado : Lieu d'achat		
Model Number : Numero del Modelo : No. de modéle	*Serial Number : Numero de Serie : No. de série*	

Registering your purchase enables us to contact you in the unlikely event of a service update or product recall and verifies your ownership in the event of loss. : El registrar su compra nos permite estar en contacto con usted en caso de cualquier evento como el aviso de tiempo de servicio o la revocación del producto y verificación de propiedad en caso de robo o pérdida. : L'enregistrement de votre achat nous permettra de vous contacter dans le cas improbable de modifications des instructions d'entretien ou de rappel du produit et vérifier que vous êtes le propriétaire en cas de vol ou de perte.

Primary use of tool: ☐ Professional ☐ Homeowner ☐ Rental Equip.
Uso primario de la herramienta: ☐ Profesional ☐ Dueño de casa ☐ Alquiler
Usage principal : ☐ Professionnel ☐ Residential ☐ Location

Do you wish to receive periodic ECHO product information and special offers by e-mail? ☐ Yes ☐ No
¿Desea usted recibir información periódica y ofertas especiales por correo electronico sobre el producto ECHO? ☐ Yes ☐ No
Souhaitez-vous recevoir périodiquement de l'information sur les produits ECHO et les offres spéciales par courrier électronique ? ☐ Oui ☐ Non

Did you visit the ECHO website before purchasing your product?
☐ Yes ☐ No
Visitó usted la pagina web ECHO antes de comprar su producto?
☐ Sí ☐ No
Avez-vous visité le site d'ECHO avant de procurer votre produit?
☐ Oui ☐ Non

What factor(s) most influenced your purchase?

☐ Performance	☐ Price	☐ Dealer
☐ Reliability	☐ Prior Experience	☐ Quality
☐ Friend/Family	☐ Brand	☐ Warranty

¿Qué factor(es) influenció más en su compra?

☐ Funcionamiento	☐ Precio	☐ Distribuidor
☐ Confiabilidad	☐ Experiencia Anterior	☐ Calidad
☐ Amigo/Familia	☐ Marca	☐ Garantía

Quel facteur (facteurs) vous a influencé le plus?

☐ Performance	☐ Prix	☐ Marchand
☐ Fiabilité	☐ Expérience	☐ Qualité
☐ Ami/Famille	☐ Marque	☐ Garantie

ECHO INC., 400 Oakwood Rd., Lake Zurich, IL 60047
1.800.432.ECHO WWW.ECHO-USA.COM

X7572270206 02-2012

© 09/2026 ECHO Incorporated

Limited Warranty Statement

ECHO Incorporated warrants to the original retail purchaser that this ECHO® brand outdoor product is free from defects in material and workmanship and agrees to repair or replace at ECHO Incorporated's discretion, any defective product free of charge within these time periods from the date of purchase.

Mower Warranty:

- 5 Year Consumer/Homeowner
- 90 Days Commercial

Engine Warranty:

- See engine manufacturer's separate warranty.

This warranty extends to the original retail purchaser only and commences on the date of the original retail purchase. Any part of this product found, in the reasonable judgment of ECHO Incorporated, to be defective in material or workmanship will be repaired or replaced without charge for parts and labor by an authorized ECHO dealer. Repair parts and accessories replaced under this warranty are warranted only for the balance of the original warranty period.

The product, including any defective part, must be returned to an authorized ECHO dealer within the warranty period. The expense of delivering the product to the dealer for warranty work and the expense of returning it back to the owner after repair or replacement will be paid by the owner. ECHO Incorporated's responsibility in respect to claims is limited to making the required repairs or replacements and no claim of breach of warranty shall be cause for cancellation or rescission of the contract of sale of any ECHO brand outdoor product. Proof of purchase will be required by the dealer to substantiate any warranty claim. All warranty work must be performed by an authorized ECHO dealer.

This warranty does not cover any product that has been subject to misuse, neglect, negligence, or accident, or that has been operated in any way contrary to the operating instructions as specified in the Operator's Manual. This warranty does not apply to any damage to the product that is the result of improper maintenance or to any product that has been altered or modified. The warranty does not extend to repairs made necessary by normal wear or by the use of parts or accessories which are either incompatible with the ECHO brand outdoor product, or that adversely affect its operation, performance, or durability. In addition, this warranty does not cover wear to normal items such as,

© 09/2026 ECHO Incorporated

but not limited to:
A. Tune-ups - Air filters, gas filters, carburetors, spark plugs, filters, oil changes
B. Wear items – Recoil starter rope, wheels, bearings, belts, pulleys, mower blades
C. IMPORTANT: Some components not covered under this warranty may still be covered by a separate warranty issued by the engine manufacturer. Please see the engine manufacturer's warranty supplied with this product for further details.

ECHO Incorporated reserves the right to change or improve the design of this product without assuming any obligation to modify any product previously manufactured.

All implied warranties are limited in duration to the stated warranty period. Accordingly, any such implied warranties including merchantability, fitness for a particular purpose, or otherwise, are disclaimed in their entirety after the expiration of the appropriate five-year, or 90 day warranty period. ECHO incorporated's obligation under this warranty is strictly and exclusively limited to the repair or replacement of defective parts and ECHO incorporated does not assume or authorize anyone to assume for them any other obligation. Some states do not allow limitations on how long an implied warranty lasts, so the above limitation may not apply to you. ECHO incorporated assumes no responsibility for incidental, consequential, or other damages including, but not limited to, expense of returning the product to an authorized dealer for ECHO brand outdoor products and expense of delivering it back to the owner, mechanic's travel time, telephone or telegram charges, rental of a like product during the time warranty service is being performed, travel, loss or damage to personal property, loss of revenue, loss of use of the product, loss of time, or inconvenience. Some states do not allow the exclusion or limitation of incidental or consequential damages, so the above limitation or exclusion may not apply to you.

This warranty gives you specific legal rights, and you may also have other rights which vary from state to state.

This warranty applies to ECHO brand lawnmowers manufactured by or for ECHO Incorporated and sold in the United States and Canada.

To locate your nearest authorized ECHO dealer, visit www.ECHO-usa.com or dial 1-800-432-ECHO (3246).

© 09/2026 ECHO Incorporated

NOTES

© 09/2026 ECHO Incorporated

NOTES

© 09/2026 ECHO Incorporated

703LMS000001 - 703LMS999999
705LMS000001 - 705LMS999999

ECHO INCORPORATED
400 Oakwood Road
Lake Zurich, IL 60047
www.echo-usa.com