Operator's Manual 99944200470 Power Edger Attachment

FOR MODELS: SRM-2100SB, 2400SB, 210SB, 211SB, 225SB, 260SB, 261SB

PAS-2100, 2400, 2601, 210, 211, 225, 225VP, 225VPB, 230, 231, 260, 261, 265, 266, 280, PAS-2620

DPAS-2100/SB, 2600/SB

⚠ WARNING

Read and understand all provided literature before use. Failure to do so could result in serious injury.

X7532278712

© 03/24 ECHO Incorporated

TABLE OF CONTENTS

Introduction 3
Servicing Information 4
Parts and Serial Number 4
Service 4
ECHO Consumer Product Support 4
Product Registration 4
Additional Literature 4
Safety 5
Manual Safety Symbols and Important Information 5
International Symbols 6
Personal Condition and Safety Equipment 7
Equipment 12
Description 13
Contents 14
Assembly 14
Power Head Shaft to Lower Shaft Assembly 14
Operation 15
Edger Operation Techniques 15
Maintenance 17
Skill Levels 18
Maintenance Intervals 18
Lubrication 18
Edger Blade Replacement 19
Storage 21
Storage Hook Installation 21
Specifications 22
Product Registration 22

© 03/24 ECHO Incorporated

INTRODUCTION

Specifications, descriptions, and illustrative material in this literature are as accurate as possible. Specifications are subject to change without notice. Illustrations might include optional equipment and accessories, and might not include all standard equipment. Your equipment might appear slightly different than pictured equipment.

Read and understand all provided literature. Literature contains specifications and information for safety, operation, maintenance, storage, and assembly specific to this product. Scan QR codes for more information.

For additional literature, including safety manuals where applicable, or questions regarding terms used in this manual, visit:

https://www.echo-usa.com/manuals

OR

https://www.shindaiwa-usa.com/manuals

© 03/24 ECHO Incorporated

SERVICING INFORMATION

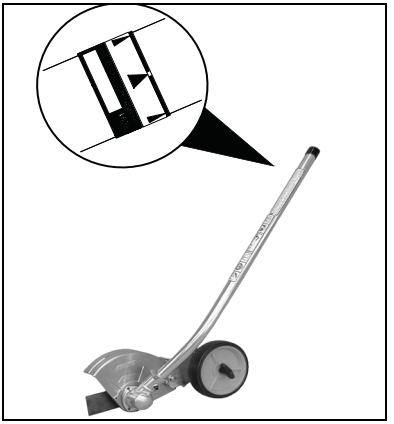

Parts and Serial Number

Genuine ECHO parts and assemblies for your ECHO products are available only from an Authorized ECHO Dealer. When you do need to buy parts, always have the model number and serial number of the unit with you. For future reference write them in the space provided below.

Model No. _____

Serial No. _____

Service

Service of this product during the warranty period must be performed by an Authorized ECHO Service Dealer. For the name and address of the Authorized ECHO Service Dealer nearest you, ask your retailer or call: 1-800-432-ECHO (3246). Dealer information is also available on our Web Site www.echo-usa.com. When presenting your unit for Warranty service/ repairs, proof of purchase is required.

ECHO Consumer Product Support

If you require assistance or have questions concerning the application, operation, or maintenance of this product, call the ECHO Consumer Product Support Department at 1-800-432-ECHO (3246) from 8:00 a.m. to 5:00 p.m. (Central Standard Time) Monday through Friday. Before calling, please know the model and serial number of your unit.

Product Registration

Register your ECHO equipment online at www.echo-usa.com or by filling out the product registration sheet included in this manual. Registering your product confirms warranty coverage and provides a direct link to ECHO if we find it necessary to contact you.

Additional Literature

In addition to finding information online, information is available from your Authorized ECHO Service Dealer, or by contacting ECHO Incorporated, 400 Oakwood Road, Lake Zurich, IL 60047, 1-800-432-ECHO (3246).

© 03/24 ECHO Incorporated

SAFETY

Manual Safety Symbols and Important Information

Throughout this manual and on the product itself, you will find safety alerts and helpful, informational messages preceded by symbols or key words. The following is an explanation of those symbols and key words and what they mean to you.

DANGER

The safety alert symbol accompanied by the word "DANGER" calls attention to an act or condition which WILL lead to serious personal injury or death if not avoided.

WARNING

The safety alert symbol accompanied by the word "WARNING" calls attention to an act or condition which CAN lead to serious personal injury or death if not avoided.

CAUTION

The safety alert symbol accompanied by the word "CAUTION" calls attention to an act or condition which might lead to minor or moderate personal injury if not avoided.

NOTICE

The enclosed message provides information necessary for the protection of the unit.

Note: This enclosed message provides tips for use, care and maintenance of the unit.

CIRCLE AND SLASH SYMBOL
This symbol means the specific action shown is prohibited. Ignoring these prohibitions can result in serious or fatal injury.

© 03/24 ECHO Incorporated

International Symbols

Symbol	Description	Symbol	Description
	Warning, see Operator's Manual.		Safety / Alert
	Wear eye, ear and head protection.		Finger severing.
	Wear hand and foot protection.		Rotating cutting attachment.
	Wear face shield.		Wear slip-resistant footwear.
	Keep feet away from blade.		Do not operate closer than 15 m (50 ft.) from electrical hazards. Keep bystanders at least 15 m (50 ft.) away.
	DO NOT USE BLADES - line head only.		Beware of thrown objects.
	Hot surface		Plan retreat path from falling objects.

© 03/24 ECHO Incorporated

Symbol	Description	Symbol	Description
	DO NOT USE LINE HEAD - blades only.		Do not cut branches overhead.
			Keep bystanders and helpers away 15 m (50 ft.).
			Beware thrown objects. Wear eye protection.
			Keep bystanders and helpers away 15 m (50 ft.).

Personal Condition and Safety Equipment

WARNING

Cancer and Reproductive Harm
www.P65Warnings.ca.gov

WARNING

The muffler or catalytic muffler and surrounding cover may become extremely hot. If unit is equipped with muffler, always keep clear of exhaust and muffler area, otherwise serious personal injury might occur.

WARNING

Users of this product risk injury to themselves and others if the unit is used improperly and/or safety precautions are not followed. Proper clothing and safety gear must be worn when operating unit.

© 03/24 ECHO Incorporated

Physical Condition

Your judgment and physical dexterity may not be good:

- If you are tired or sick
- If you are taking medication
- If you have taken alcohol or drugs

Operate unit only if you are physically and mentally well.

Eye Protection

WARNING

- **Eye protection that meets ANSI Z87.1 or CE requirements must be worn whenever you operate the unit.**
- **For additional safety, a full-face shield can be worn over safety glasses or goggles to provide protection from sharp branches or flying debris.**

Hand Protection

Wear sturdy, no-slip, rubber work gloves to improve your grip on the handles. Gloves also provide protection against cuts and scratches, cold environments, and reduce the transmission of machine vibration to your hands.

Hearing and Ear Protection

ECHO recommends wearing personal protective equipment whenever unit is used.

Breathing Protection

Operators who are sensitive to dust or other common airborne allergens may need to wear a dust mask to prevent inhaling these materials while operating unit. Dust masks can provide protection against dust, plant debris, and other plant matter such as pollen. Make sure the mask does not impair your vision, and replace the mask as needed to prevent air restrictions.

Proper Clothing

Wear snug-fitting, durable clothing:

- Pants should have long legs, shirts should have long sleeves.
- DO NOT WEAR SHORTS.

© 03/24 ECHO Incorporated

- DO NOT WEAR TIES, SCARVES, JEWELRY, or clothing with loose or hanging items that could become entangled in moving parts or surrounding growth.
- Keep clothing buttoned or zipped, and keep shirt tails tucked in.
- Wear sturdy work shoes with nonskid rubber soles.
- DO NOT WEAR OPEN TOED SHOES.
- DO NOT OPERATE UNIT WITH BARE FEET.

Keep long hair away from engine and air intake. Retain hair with cap or net.

Heavy protective clothing can increase operator fatigue, which may lead to heat stroke. Schedule heavy work for early morning or late afternoon hours when temperatures are cooler.

⚠ WARNING

The components of this machine generate an electromagnetic field during operation, which can interfere with some pacemakers. To reduce the risk of serious or fatal injury, persons with pacemakers should consult with their physician and the pacemaker manufacturer before operating this machine. In the absence of such information, ECHO does not recommend the use of this machine by anyone who has a pacemaker.

Extended Operation and Extreme Conditions

⚠ CAUTION

Prolonged exposure to cold and/or vibration can result in injury. Read and follow all safety and operation instructions to minimize risk of injury. Failure to follow instructions can result in painful wrist/hand/arm injuries.

It is believed that a condition called Raynaud's Phenomenon, which affects the fingers of certain individuals, may be brought about by exposure to vibration and cold. Exposure to vibration and cold may cause tingling and burning sensations, followed by loss of color and numbness in the fingers. The following precautions are strongly recommended, because the minimum exposure, which might trigger the ailment, is unknown.

- Keep your body warm, especially the head, neck, feet, ankles, hands, and wrists.

© 03/24 ECHO Incorporated

- Maintain good blood circulation by performing vigorous arm exercises during frequent work breaks, and also by not smoking.
- Limit the hours of operation. Try to fill each day with jobs where operating the unit or other hand-held power equipment is not required.
- If you experience discomfort, redness, and swelling of the fingers followed by whitening and loss of feeling, consult your physician before further exposing yourself to cold and vibration.

Repetitive Stress Injuries (RSI)

It is believed that overusing the muscles and tendons of the fingers, hands, arms, and shoulders may cause soreness, swelling, numbness, weakness, and extreme pain in those areas. Certain repetitive hand activities may put you at a high risk for developing a Repetitive Stress Injury (RSI). An extreme RSI condition is Carpal Tunnel Syndrome (CTS), which could occur when your wrist swells and squeezes a vital nerve that runs through the area. Some believe that prolonged exposure to vibration may contribute to CTS. CTS can cause severe pain for months or even years.

To reduce the risk of RSI/CTS, do the following

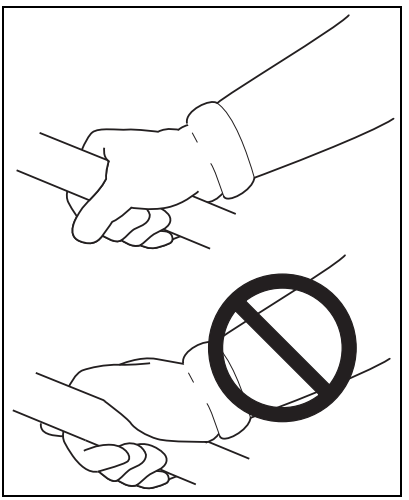

- Avoid using your wrist in a bent, extended, or twisted position. Instead try to maintain a straight wrist position. Also, when grasping, use your whole hand, not just the thumb and index finger.
- Take periodic breaks to minimize repetition and rest your hands.
- Reduce the speed and force with which you do the repetitive movement.
- Do exercises to strengthen the hand and arm muscles.
- Immediately stop using all power equipment and consult a doctor if you feel tingling, numbness, or pain in the fingers, hands, wrists, or arms. The sooner RSI/CTS is diagnosed, the more likely permanent nerve and muscle damage can be prevented.

© 03/24 ECHO Incorporated

DANGER

All over head electrical conductors and communications wires can have electricity flow with high voltages. This unit is not insulated against electrical current. Never touch wires directly or indirectly, otherwise serious injury or death can result.

DANGER

Do not operate gas-powered products indoors or in inadequately ventilated areas. Engine exhaust contains poisonous emissions and can cause serious injury or death.

Read Manuals

- Provide all users of this equipment with literature for instructions on safe operation.

Clear the Work Area

- Always clear the work area of foreign objects such as rocks, broken glass, nails, wire, or string, and check for any hidden hazards. Spectators and fellow workers must be warned, and children and animals prevented from coming nearer than 15 m (50 ft.) while the unit is in use.
- Outside the 15 m (50 ft.) zone, there is still a risk of injury from thrown objects.
- Bystanders should be encouraged to wear eye protection.
- If you are approached, stop the engine and cutting attachment.
- When a bladed unit is used, there is the added risk of injury to bystanders being struck with the moving blade in the event of a blade thrust or other unexpected reaction of the blade.

Keep a Firm Grip

- Always hold throttle handle and support handle with thumbs and fingers tightly encircling the handles.

Keep a Solid Stance

- Maintain footing and balance at all times. Do not stand on slippery, uneven or unstable surfaces. Do not work in odd positions or on ladders. Do not over reach.
- Keep cutting attachment below waist.
- Keep all body parts away from rotating cutting attachment.

© 03/24 ECHO Incorporated

Avoid Hot Surfaces

- If unit is equipped with muffler, keep exhaust area clear of flammable debris. Avoid contact during and immediately after operation.

Equipment

WARNING

Use this attachment with ECHO approved models only. Serious injury may result from the use of this attachment combined with a non approved ECHO product.

- **Check unit for loose/missing nuts, bolts, and screws. Tighten and/or replace as needed.**
- **Inspect shield for damage and that shield is securely in place. Replace if shield is damaged or missing.**
- **Check that the cutting attachment is firmly attached and in safe operating condition.**
- **Check that support handle is adjusted for safe, comfortable operation. See Assembly Section for proper adjustment.**

Note: ECHO, INC. will not be responsible for the failure of cutting devices, attachments or accessories which have not been tested and approved by ECHO.

WARNING

Moving parts can amputate fingers or cause severe injuries. Keep hands, clothing and loose objects away from all openings.

- ***ALWAYS stop unit, disconnect spark plug or remove battery, and make sure all moving parts have come to a complete stop before removing obstructions, clearing debris, or servicing unit.***
- ***DO NOT start or operate unit unless all guards and protective covers are properly assembled to unit.***
- ***NEVER reach into any opening while the unit is running. Moving parts may not be visible through openings.***

© 03/24 ECHO Incorporated

DESCRIPTION

Locate the safety decal(s) or etching(s) on your unit. Make sure they are legible, and that you understand and follow the instructions. If any cannot be read, replacements can be ordered from your ECHO dealer. Images shown below are for example only. Those on your unit might appear slightly different

1. Blade
2. Debris shield/flap
3. Drive shaft assembly
4. Wheel

© 03/24 ECHO Incorporated

CONTENTS

The ECHO product you purchased has been factory pre-assembled for your convenience. Due to packaging restrictions, some assembly may be necessary.

After opening the carton, check for damage. Immediately notify your retailer or ECHO Dealer of damaged or missing parts. Use the contents list to check for missing parts.

1	Curved shaft edger attachment
1	Operator's manual
1	Warranty sheet
2	Split pins
1	Storage hook assembly

ASSEMBLY

Power Head Shaft to Lower Shaft Assembly

WARNING

Do not perform maintenance or assembly procedures with engine running.

1. Set Power Head/Shaft Assembly on a level surface.
2. Pull locater pin (A) out, and turn counterclockwise one-quarter turn to lock-out position.
3. Remove storage hook and cap from attachment drive shaft.

Note: Your coupler may appear different than coupler shown. Earlier model power heads may have shorter couplers.

4. Carefully fit attachment drive shaft assembly into coupler (B). Rotate the shaft (C) to make sure the inner lower drive shaft engages the square upper drive shaft socket.

Note: Lower bearing housing and head assembly must be in line with the engine.

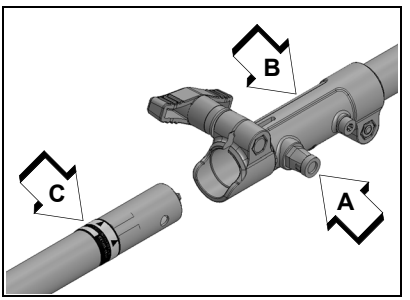

© 03/24 ECHO Incorporated

Note: Some models have an assembly line decal to assist in assembly.

5. Rotate locater pin (A) one-quarter turn clockwise to engage lower shaft hole. Make sure locater pin is fully engaged by rotating the lower drive shaft. Locater pin should snap flush in coupler. Full engagement will prevent further shaft rotation.
6. Secure lower shaft assembly to coupler by tightening clamping knob (D).

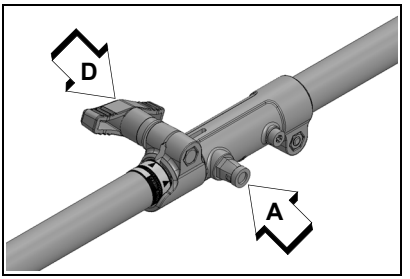

OPERATION

WARNING

Moving parts can amputate fingers or cause severe injuries. Keep hands, clothing and loose objects away from all openings. Always stop unit, disconnect spark plug or remove battery, and make sure all moving parts have come to a complete stop before removing obstructions, clearing debris, or servicing unit.

Note: Refer to your PAS power source Operator's Manuals for starting and stopping instructions.

Edger Operation Techniques

1. Before edging, water the area to soften the ground to make edging easier.
2. Before edging, check the area and remove all obstacles and objects that could be thrown.
3. Plan to edge regularly to make it easier to keep a neat edge and to avoid having to make more than one pass.

Note: Blade depth may have to be adjusted due to differences in height between the hard surface and the top of the grass.

WARNING

Never adjust blade height with engine running, otherwise serious personal injury may result.

© 03/24 ECHO Incorporated

CAUTION

Wear gloves or personal injury may result Gearcase and surrounding area may be hot.

4. Loosen adjustment knob (A). Move wheel up to increase cutting depth, or down to decrease cutting depth. A depth of 0.5 in. (13 mm) is optimal. Tighten adjustment knob (A).

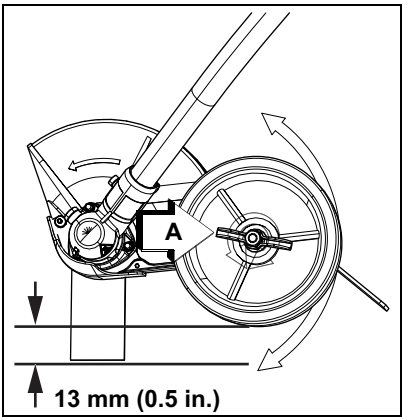

5. Before edging, plan your direction of travel so that the unit will always be positioned on your right side and so that you walk on a hard surface whenever possible.

6. Position edger as shown.

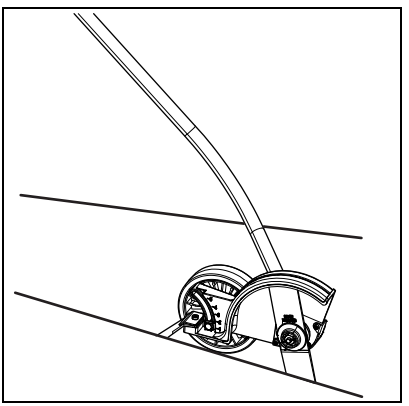

WARNING

Before edging, be sure to read and understand the entire Operator's Manual to avoid serious injury.

7. When starting to edge, run the engine at full throttle, and lower the blade gently into the ground, being careful not to hit the concrete with the blade.
8. Don't force the blade. Move only as quickly as the blade will allow.

© 03/24 ECHO Incorporated

WARNING

The complete unit, specifically the drive shaft assembly and muffler exhaust area, if equipped, may become very hot during use. Avoid contact during and immediately after operation, otherwise serious personal injury may result.

MAINTENANCE

WARNING

Moving parts can amputate fingers or cause severe injuries. Keep hands, clothing and loose objects away from all openings. Always stop unit, disconnect spark plug or remove battery, and make sure all moving parts have come to a complete stop before removing obstructions, clearing debris, or servicing unit. Allow the unit to cool before performing maintenance or adjustments. Wear gloves to protect hands from sharp edges and hot surfaces.

WARNING

Operating a poorly maintained unit can result in serious injuries to operator or bystanders. Always follow all maintenance instructions as written, otherwise serious personal injury can result.

Your unit is designed to provide many hours of trouble free service. Regular scheduled maintenance will help your unit achieve that goal. If you are unsure or are not equipped with the necessary tools, we recommend that you take your unit to a Servicing Dealer for maintenance. To help you decide whether you want to do it yourself or have the Dealer do it, each maintenance task has been graded. If the task is not listed, see your Dealer for repairs.

NOTICE

The use of emission control components other than those specifically designed for this unit is a violation of federal law.

© 03/24 ECHO Incorporated

Skill Levels

Level 1 = Easy to do. Common tools may be required.

Level 2 = Moderate difficulty. Some specialized tools may be required.

Level 3 = See your dealer.

Click HERE or go to http://www.echo-usa.com/products/maintenance-kit

or

HERE https://www.shindaiwa-usa.com/you-can.aspx

Maintenance Intervals

Component /System	Maintenance Procedure	Skill Level	Interval
Drive Shaft	Grease[1]	1	Every 25 hours of use
Gear Housing			Every 15 - 25 hours of use
Screws/ Nuts/Bolts	Inspect/Tighten/Replace		Before Each Use
Edger Blade	Inspect / Replace	1	Before Each Use

IMPORTANT - Time intervals shown are maximum. Actual use and your experience will determine the frequency of required maintenance.

MAINTENANCE PROCEDURE NOTE:

1 Apply lithium based grease.

Lubrication

Level 1.

Parts required: Lithium-base Grease.

Gear Case

Note: Grease gear case every 15 - 25 hours of use.

© 03/24 ECHO Incorporated

1. Clean all loose debris from gear box.
2. Remove plug (G) and check level of grease. Grease should fill gear case to bottom of grease plug hole.
3. Add grease if necessary using squeeze-type tube. Do not use high pressure grease gun. DO NOT over-fill.

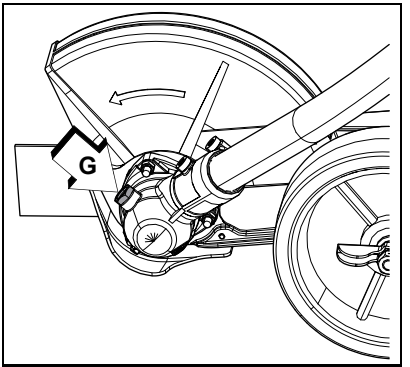

Drive Shaft (Lower)

1. Loosen screw (A) and remove center locating screw (B). Pull gear box and shield from drive shaft housing.

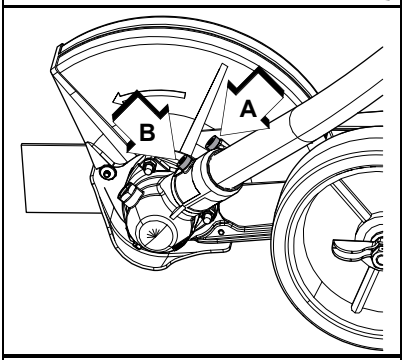

2. Pull flexible cable from the drive shaft housing, wipe clean and re-coat with 15 ml (0.5 oz.) of grease.
3. Slide the flexible cable back in the drive housing. DO NOT get dirt on the flex cable.
4. Install the gear housing and shield assembly.
5. Tighten screws securely.

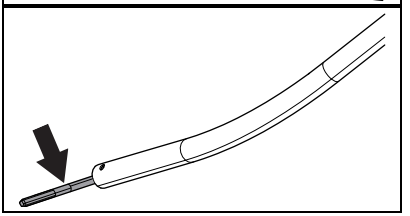

Edger Blade Replacement

Level 1.

Parts required: Blade, new split pin.

Note: Replace blade when it is bent, damaged, or worn shorter than 152.4 mm (6 in.).

© 03/24 ECHO Incorporated

CAUTION

Wear gloves or personal injury may result Gearcase and surrounding area may be hot.

1. Remove split pin (A).

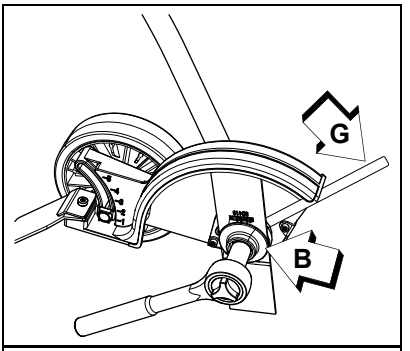

2. Align hole in inner blade adapter (B) with notch in gear housing, and insert locking tool (G) to prevent PTO shaft (C) from rotating.
3. Remove L.H. blade nut (D) by turning clockwise. Remove outer blade adapter (E), and blade (F).
4. Install and center blade (F) on inner blade adapter (B).
5. Install outer adapter (E) and nut (D). Tighten nut (D) firmly, turning counterclockwise.

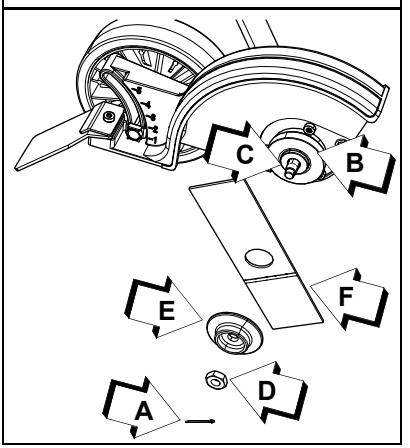

Note: Never reuse old split pin.

6. Install new split pin (A) to secure nut, and bend both legs of pin counterclockwise around PTO shaft (C).

© 03/24 ECHO Incorporated

STORAGE

Storage Hook Installation

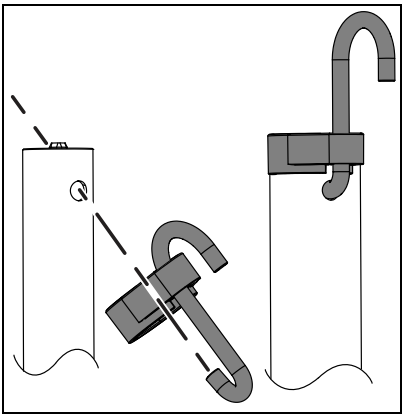

1. Insert small end of hook into locating hole on attachment shaft.
2. Slide plastic cap onto end of attachment shaft.

© 03/24 ECHO Incorporated

SPECIFICATIONS

MODEL	Curved Shaft Edger
Shaft Length	790 mm (31.1 in.)
Attachment Width	235 mm (9.25 in.)
Attachment Height	290 mm (11.42 in.)
Weight with blade	2.35 kg (5.17 lb.)
Drive Shaft Type	6.35 mm (0.25 in.) Flex Shaft
Rotating Direction	Clockwise; viewed from right side
Blade Length	197 mm (7.75 in.)
Gear Case Ratio (unit with metal blade shield)	2.07:1
Gear Case Ratio (unit with plastic blade shield)	1.62:1
Shield	Open, anti-clog

PRODUCT REGISTRATION

Thank you for choosing ECHO Power Equipment

Please go to http://www.echo-usa.com/Warranty/Register-Your-ECHO to register your new product on-line. It's ***FAST*** and ***EASY***! NOTE: your information will never be sold or misused by ECHO, Incorporated. Registering your purchase enables us to contact you in the unlikely event of a service update or product recall, and verifies your ownership for warranty consideration.

If you do not have access to the Internet, you can complete the form below and mail to:

ECHO Incorporated, Product Registration, PO Box 1139,
Lake Zurich, IL 60047.

© 03/24 ECHO Incorporated

PRODUCT REGISTRATION CARD : TARJETA DE REGISTRO : CARTE D'ENREGISTREMENT DU PRODUIT

ONLINE OPTION: Register online and save a stamp! You will be alerted of product updates and/or be sent new ECHO product information and special offers. Simply go to: **www.echo-usa.com**

OPCIÓN POR INTERNET: ¡Registrese en la pagina web y ahorre una estampilla! Le alertarán sobre actualizaciones del producto y/o se le enviara información sobre los nuevos productos ECHO y las ofertas especiales. Simplemente visite: **www.echo-usa.com**

OPTION EN LIGNE : Enregistrer en ligne et épargner un timbre! Vous serez informé sur les nouveaux produits ECHO et les mises à jour de produit ainsi que les offres spéciales. Simplement visitez le: **www.echo-usa.com**

Please Print : Por Favor Enscriba Con Letra De Molde : En Lettre Carré S.V.P.

Confidential: Information provided will not be shared or sold

Purchaser's Name : Nombre del Comprador : Nom de l'acheteur		
Address : Dirección : Adresse		
City : Ciudad : Ville	*State : Estado : Province*	*Zip Code : Código Postal : Code Postal*
E-Mail Address : Dirección De Correo Electrónico : Courrier Électronique		
Phone Number : Número De Teléfono : Téléphone	*Date of Purchase : Fecha de la Compra : Date de l'achat*	
Where Purchased : Nombre del Almacén donde fue Comprado : Lieu d'achat		

Model Number : Numero del Modelo : No. de modéle	*Serial Number : Numero de Serie : No. de série*

Registering your purchase enables us to contact you in the unlikely event of a service update or product recall and verifies your ownership in the event of loss. : El registrar su compra nos permite estar en contacto con usted en caso de cualquier evento como el aviso de tiempo de servicio o la revocación del producto y verificación de propiedad en caso de robo o pérdida. : L'enregistrement de votre achat nous permettra de vous contacter dans le cas improbable de modifications des instructions d'entretien ou de rappel du produit et vérifier que vous êtes le propriétaire en cas de vol ou de perte.

Primary use of tool: ☐ Professional ☐ Homeowner ☐ Rental Equip.
Uso primario de la herramienta: ☐ Profesional ☐ Dueño de casa ☐ Alquiler
Usage principal : ☐ Professionnel ☐ Residential ☐ Location

Do you wish to receive periodic ECHO product information and special offers by e-mail? ☐ Yes ☐ No
¿Desea usted recibir información periódica y ofertas especiales por correo electronico sobre el producto ECHO? ☐ Yes ☐ No
Souhaitez-vous recevoir périodiquement de l'information sur les produits ECHO et les offres spéciales par courrier électronique ? ☐ Oui ☐ Non

Did you visit the ECHO website before purchasing your product?
☐ Yes ☐ No
Visitó usted la pagina web ECHO antes de comprar su producto?
☐ Si ☐ No
Avez-vous visité le site d'ECHO avant de procurer votre produit?
☐ Oui ☐ Non

What factor(s) most influenced your purchase?
☐ Performance ☐ Price ☐ Dealer
☐ Reliability ☐ Prior Experience ☐ Quality
☐ Friend/Family ☐ Brand ☐ Warranty

¿Qué factor(es) influenció más en su compra?
☐ Funcionamiento ☐ Precio ☐ Distribuidor
☐ Confiabilidad ☐ Experiencia Anterior ☐ Calidad
☐ Amigo/Familia ☐ Marca ☐ Garantía

Quel facteur (facteurs) vous a influencé le plus?
☐ Performance ☐ Prix ☐ Marchand
☐ Fiabilité ☐ Expérience ☐ Qualité
☐ Ami/Famille ☐ Marque ☐ Garantie

ECHO Incorporated 400 Oakwood Rd., Lake Zurich, IL 60047
1.800.432.ECHO WWW.ECHO-USA.COM

X7572270206 02-2012

S06000224301 - S06000999999

ECHO INCORPORATED
400 Oakwood Road
Lake Zurich, IL 60047
www.echo-usa.com