Operator's Manual PPF-2620 Power Pruner®

⚠ WARNING

The engine exhaust from this product contains chemicals known to the State of California to cause cancer, birth defects, or other reproductive harm.

⚠ WARNING

Read and understand all provided literature before use. Failure to do so could result in serious injury.

Note: This product complies with CAN ICES-2/NMB-2.

X7502346600

©01/24 ECHO Incorporated

TABLE OF CONTENTS

Introduction 3
Servicing Information 4
Parts and Serial Number 4
Service 4
ECHO Consumer Product Support 4
Product Registration 4
Additional Literature 4
Safety 5
Manual Safety Symbols and Important Information 5
International Symbols 6
Personal Condition and Safety Equipment 8
Kickback 13
Equipment 13
Emission Control (Exhaust & Evaporative) 15
EPA Emissions Control Information 15
Description 16
Contents 18
Assembly 18
Cutting Attachment to Drive Shaft Installation 18
Saw Chain Adjustment 19
Operation 20
Fuel 21
Lubricating the Guide Bar and Saw Chain 24
Starting Cold Engine 25
Starting Warm Engine 27
Stopping Engine 28
Pruning Techniques 28
Maintenance 30
Skill Levels 31
Maintenance Intervals 31
Air Filter 33
Fuel Filter 34
Spark Plug 35
Cooling System 36
Exhaust System 37
Carburetor Adjustment 39
Lubrication 40
Guide Bar and Saw Chain Replacement 41
Guide Bar Cover Cleaning 42
Filing Standard Saw Chain 43
Troubleshooting 46
Storage 47
Long Term Storage (Over 30 Days) 47
Specifications 49
Product Registration 50

©01/24 ECHO Incorporated

INTRODUCTION

Specifications, descriptions, and illustrative material in this literature are as accurate as possible. Specifications are subject to change without notice. Illustrations might include optional equipment and accessories, and might not include all standard equipment. Your equipment might appear slightly different than pictured equipment.

Read and understand all provided literature. Literature contains specifications and information for safety, operation, maintenance, storage, and assembly specific to this product. Scan QR codes for more information.

For additional literature, including safety manuals where applicable, or questions regarding terms used in this manual, visit:

https://www.echo-usa.com/manuals

OR

https://www.shindaiwa-usa.com/manuals

©01/24 ECHO Incorporated

SERVICING INFORMATION

Parts and Serial Number

Genuine ECHO parts and assemblies for your ECHO products are available only from an Authorized ECHO Dealer. When you do need to buy parts, always have the model number and serial number of the unit with you. For future reference write them in the space provided below.

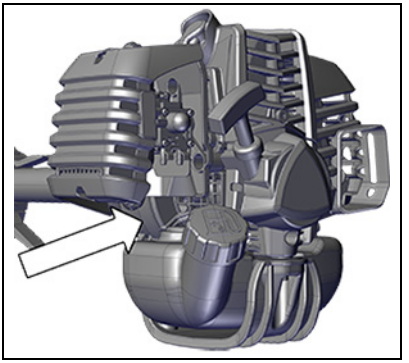

Model No. _____ Serial No. _____

Service

Service of this product during the warranty period must be performed by an Authorized ECHO Service Dealer. For the name and address of the Authorized ECHO Service Dealer nearest you, ask your retailer or call: 1-800-432-ECHO (3246). Dealer information is also available on our Web Site www.echo-usa.com. When presenting your unit for Warranty service/ repairs, proof of purchase is required.

ECHO Consumer Product Support

If you require assistance or have questions concerning the application, operation, or maintenance of this product, call the ECHO Consumer Product Support Department at 1-800-432-ECHO (3246) from 8:00 a.m. to 5:00 p.m. (Central Standard Time) Monday through Friday. Before calling, please know the model and serial number of your unit.

Product Registration

Register your ECHO equipment online at www.echo-usa.com or by filling out the product registration sheet included in this manual. Registering your product confirms warranty coverage and provides a direct link to ECHO if we find it necessary to contact you.

Additional Literature

In addition to finding information online, information is available from your Authorized ECHO Service Dealer, or by contacting ECHO Incorporated, 400 Oakwood Road, Lake Zurich, IL 60047, 1-800-432-ECHO (3246).

©01/24 ECHO Incorporated

SAFETY

Manual Safety Symbols and Important Information

Throughout this manual and on the product itself, you will find safety alerts and helpful, informational messages preceded by symbols or key words. The following is an explanation of those symbols and key words and what they mean to you.

DANGER

The safety alert symbol accompanied by the word "DANGER" calls attention to an act or condition which WILL lead to serious personal injury or death if not avoided.

WARNING

The safety alert symbol accompanied by the word "WARNING" calls attention to an act or condition which CAN lead to serious personal injury or death if not avoided.

CAUTION

The safety alert symbol accompanied by the word "CAUTION" calls attention to an act or condition which might lead to minor or moderate personal injury if not avoided.

NOTICE

The enclosed message provides information necessary for the protection of the unit.

Note: This enclosed message provides tips for use, care and maintenance of the unit.

CIRCLE AND SLASH SYMBOL
This symbol means the specific action shown is prohibited. Ignoring these prohibitions can result in serious or fatal injury.

©01/24 ECHO Incorporated

International Symbols

Symbol	Description	Symbol	Description
	Warning, See Operator's Manual	H	Carburetor Adjustment - High Speed Mixture
	Wear Eye, Ear and Head Protection	T	Carburetor Adjustment - Idle Speed
	Wear Hand and Foot Protection	L	Carburetor Adjustment - Low Speed Mixture
	Safety/Alert	STOP	Stop
	Hot Surface		Fuel and Oil Mixture
	Finger Severing		Do not operate closer than 15 m (50 ft.) from electrical hazard.
	Avoid all power lines.		Plan retreat path from falling objects.

©01/24 ECHO Incorporated

Symbol	Description	Symbol	Description
	DO NOT Allow Flames or Sparks Near Fuel	Ignition ON I OFF O	Ignition ON / OFF
	DO NOT Smoke Near Fuel		Purge Bulb
	Choke Control “RUN” Position (Choke Open)		Choke Control “COLD START” Position (Choke Closed)
	Wear Slip Resistant Footwear		Chain Lubrication
	Do not cut branches overhead.		

Note: Not all symbols will appear on your unit.

©01/24 ECHO Incorporated

Personal Condition and Safety Equipment

WARNING

Cancer and Reproductive Harm
www.P65Warnings.ca.gov

WARNING

The muffler or catalytic muffler and surrounding cover may become extremely hot. Always keep clear of exhaust and muffler area, otherwise serious personal injury might occur.

WARNING

Users of this product risk injury to themselves and others if the unit is used improperly and/or safety precautions are not followed. Proper clothing and safety gear must be worn when operating unit.

Physical Condition

Your judgment and physical dexterity may not be good:

- If you are tired or sick
- If you are taking medication
- If you have taken alcohol or drugs

Operate unit only if you are physically and mentally well.

Eye Protection

WARNING

- **Eye protection that meets ANSI Z87.1 or CE requirements must be worn whenever you operate the unit.**
- **For additional safety, a full-face shield can be worn over safety glasses or goggles to provide protection from sharp branches or flying debris.**

©01/24 ECHO Incorporated

Hand Protection

Wear sturdy, no-slip, rubber work gloves to improve your grip on the handles. Gloves also provide protection against cuts and scratches, cold environments, and reduce the transmission of machine vibration to your hands.

Hearing and Ear Protection

ECHO recommends wearing personal protective equipment whenever unit is used.

Breathing Protection

Operators who are sensitive to dust or other common airborne allergens may need to wear a dust mask to prevent inhaling these materials while operating unit. Dust masks can provide protection against dust, plant debris, and other plant matter such as pollen. Make sure the mask does not impair your vision, and replace the mask as needed to prevent air restrictions.

Proper Clothing

Wear snug-fitting, durable clothing:

- Pants should have long legs, shirts should have long sleeves.
- DO NOT WEAR SHORTS.
- DO NOT WEAR TIES, SCARVES, JEWELRY, or clothing with loose or hanging items that could become entangled in moving parts or surrounding growth.
- Keep clothing buttoned or zipped, and keep shirt tails tucked in.
- Wear sturdy work shoes with nonskid rubber soles.
- DO NOT WEAR OPEN TOED SHOES.
- DO NOT OPERATE UNIT WITH BARE FEET.

Keep long hair away from engine and air intake. Retain hair with cap or net.

Heavy protective clothing can increase operator fatigue, which may lead to heat stroke. Schedule heavy work for early morning or late afternoon hours when temperatures are cooler.

©01/24 ECHO Incorporated

⚠ WARNING

The components of this machine generate an electromagnetic field during operation, which can interfere with some pacemakers. To reduce the risk of serious or fatal injury, persons with pacemakers should consult with their physician and the pacemaker manufacturer before operating this machine. In the absence of such information, ECHO <u>does not recommend</u> the use of this machine by anyone who has a pacemaker.

Extended Operation and Extreme Conditions

⚠ CAUTION

Prolonged exposure to cold and/or vibration can result in injury. Read and follow all safety and operation instructions to minimize risk of injury. Failure to follow instructions can result in painful wrist/hand/arm injuries.

It is believed that a condition called Raynaud's Phenomenon, which affects the fingers of certain individuals, may be brought about by exposure to vibration and cold. Exposure to vibration and cold may cause tingling and burning sensations, followed by loss of color and numbness in the fingers. The following precautions are strongly recommended, because the minimum exposure, which might trigger the ailment, is unknown.

- Keep your body warm, especially the head, neck, feet, ankles, hands, and wrists.
- Maintain good blood circulation by performing vigorous arm exercises during frequent work breaks, and also by not smoking.
- Limit the hours of operation. Try to fill each day with jobs where operating the unit or other hand-held power equipment is not required.
- If you experience discomfort, redness, and swelling of the fingers followed by whitening and loss of feeling, consult your physician before further exposing yourself to cold and vibration.

©01/24 ECHO Incorporated

Repetitive Stress Injuries (RSI)

It is believed that overusing the muscles and tendons of the fingers, hands, arms, and shoulders may cause soreness, swelling, numbness, weakness, and extreme pain in those areas. Certain repetitive hand activities may put you at a high risk for developing a Repetitive Stress Injury (RSI). An extreme RSI condition is Carpal Tunnel Syndrome (CTS), which could occur when your wrist swells and squeezes a vital nerve that runs through the area. Some believe that prolonged exposure to vibration may contribute to CTS. CTS can cause severe pain for months or even years.

To reduce the risk of RSI/CTS, do the following

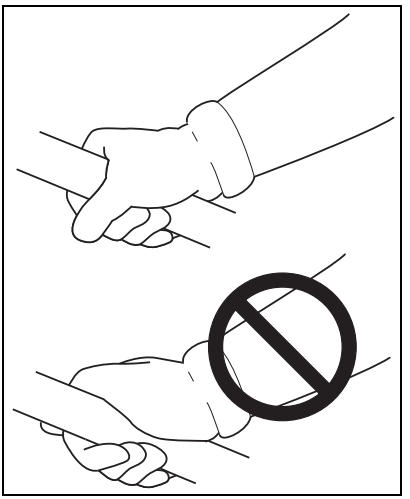

- Avoid using your wrist in a bent, extended, or twisted position. Instead try to maintain a straight wrist position. Also, when grasping, use your whole hand, not just the thumb and index finger.
- Take periodic breaks to minimize repetition and rest your hands.
- Reduce the speed and force with which you do the repetitive movement.
- Do exercises to strengthen the hand and arm muscles.
- Immediately stop using all power equipment and consult a doctor if you feel tingling, numbness, or pain in the fingers, hands, wrists, or arms. The sooner RSI/CTS is diagnosed, the more likely permanent nerve and muscle damage can be prevented.

⚠ DANGER

All over head electrical conductors and communications wires can have electricity flow with high voltages. This unit is not insulated against electrical current. Never touch wires directly or indirectly, otherwise serious injury or death can result.

⚠ DANGER

Do not operate this product indoors or in inadequately ventilated areas. Engine exhaust contains poisonous emissions and can cause serious injury or death.

©01/24 ECHO Incorporated

Read the Manuals

- Provide all users of this equipment with the Operator's Manual and Safety Manual for instructions on Safe Operation.

Clear the Work Area

- Spectators and fellow workers must be warned, and children and animals prevented from coming nearer than 15 m (50 ft.) while the unit is in use.

Use Proper Clothing & Equipment

- Always wear head protection with full face shield to help protect against falling branches and debris.

Keep a Firm Grip

- Always hold throttle handle and support handle with thumbs and fingers tightly encircling the handles.

Keep a Solid Stance

- Maintain footing and balance at all times. Do not stand on slippery, uneven or unstable surfaces. Do not work in odd positions or on ladders. Do not over reach.
- Operate the Power Pruner® only from the ground or out of an approved bucket lift.
- Always evaluate the branches to be pruned for hazards such as loose dead branches which may fall and strike the operator or helpers. Remove hazards before pruning.
- Plan retreat path from falling objects.
- Cut branches bounce when striking ground.
- Check that shoulder harness is adjusted for safe, comfortable operation.
- Turn the Power Pruner off when moving from tree to tree.
- Avoid any contact with saw chain.

Avoid Hot Surfaces

- Keep exhaust area clear of flammable debris. Avoid contact during and immediately after operation.

©01/24 ECHO Incorporated

Kickback

WARNING

Kickback can lead to dangerous loss of control of the Power Pruner® and result in serious injury to the operator or any one standing close by. Hold the Power Pruner firmly with both hands with thumbs and fingers encircling the front and rear handles. Be aware of the down and outward path the pruner will take after the cut is made.

Kickback may occur when the moving saw chain at the nose or tip of the guide bar touches an object, or when the wood closes in and pinches the saw chain in the cut. In some cases this may cause a lightning-fast reverse action, kicking the guide bar and saw chain up and back or down and back towards the operator. Either of these reactions may cause the operator to lose control of the Power Pruner which could result in serious personal injury.

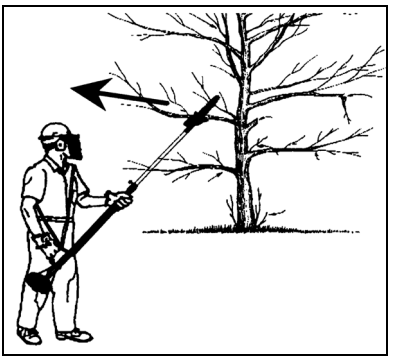

With a basic understanding of kickback, you can reduce or eliminate the element of surprise which contributes to accidents.

Avoid contact of the guide bar tip with any object while the saw chain is moving.

Cut only wood. Avoid striking concrete, metal, wire, or other obstructions which could cause kickback or damage to the saw chain.

If the saw chain does strike a foreign object, immediately stop the engine, inspect and repair the Power Pruner if necessary.

Equipment

WARNING

Use only ECHO attachments. Serious injury may result from the use of a non-approved attachment combination. ECHO Incorporated will not be responsible for the failure of cutting devices, attachments or accessories which have not been tested and approved by ECHO. Read and comply with all safety instructions listed in this manual and safety manual.

©01/24 ECHO Incorporated

- **Check unit for loose and missing nuts, bolts, and screws. Tighten or replace as needed.**

Guide Bar and Saw Chain

- Check that the cutting attachment, guide bar, and saw chain is firmly attached and in safe operating condition.
- Use only one ECHO extension on the pruner.
- Do not hit rocks, stones, tree stumps, and other foreign objects with the saw chain.
- Do not cut into the ground with the saw chain.
- If cutting attachment end strikes an obstruction, stop engine immediately and inspect saw chain for damage.
- Do not operate with a dull, fractured, or discolored saw chain.
- Remove all foreign objects from work area.
- Always cover the guide bar and saw chain with guide bar cover during transportation and for storage.

⚠ WARNING

Moving parts can amputate fingers or cause severe injuries. Keep hands, clothing and loose objects away from all openings.

- ***ALWAYS stop engine, disconnect spark plug, and make sure all moving parts have come to a complete stop before removing obstructions, clearing debris, or servicing unit.***
- ***DO NOT start or operate unit unless all guards and protective covers are properly assembled to unit.***
- ***NEVER reach into any opening while the engine is running. Moving parts may not be visible through openings.***

⚠ WARNING

Periodically Check fuel system (fuel lines, vent, grommet, fuel tank, and fuel cap) for leaks especially if the unit is dropped. If damage or leaks are found, do not use unit, otherwise serious personal injury or property damage may occur. Have unit repaired by an authorized servicing dealer before using.

©01/24 ECHO Incorporated

EMISSION CONTROL (EXHAUST & EVAPORATIVE)

EPA Emissions Control Information

The emission control system for the engine is EM (engine modification) and, if the second to last character of the Engine Family on the Emission Control Information label (see example) is “B”, “C”, “K”, or “T”, the emission control system is EM and TWC (3-way catalyst). The fuel tank/fuel line emission control system is EVAP (evaporative emissions).

An Emission Control Label is located on the engine. (This is an EXAMPLE ONLY, information on label varies by engine FAMILY).

Product Emission Durability (Emission Compliance Period)

The 50 or 300 hour emission compliance period is the time span selected by the manufacturer certifying the engine emissions output meets applicable emissions regulations, provided that approved maintenance procedures are followed as listed in the Maintenance Section of this manual.

©01/24 ECHO Incorporated

DESCRIPTION

Locate the safety decal(s) or etching(s) on your unit. Make sure they are legible, and that you understand and follow the instructions. If any cannot be read, replacements can be ordered from your ECHO dealer. Images shown below are for example only. Those on your unit might appear slightly different.

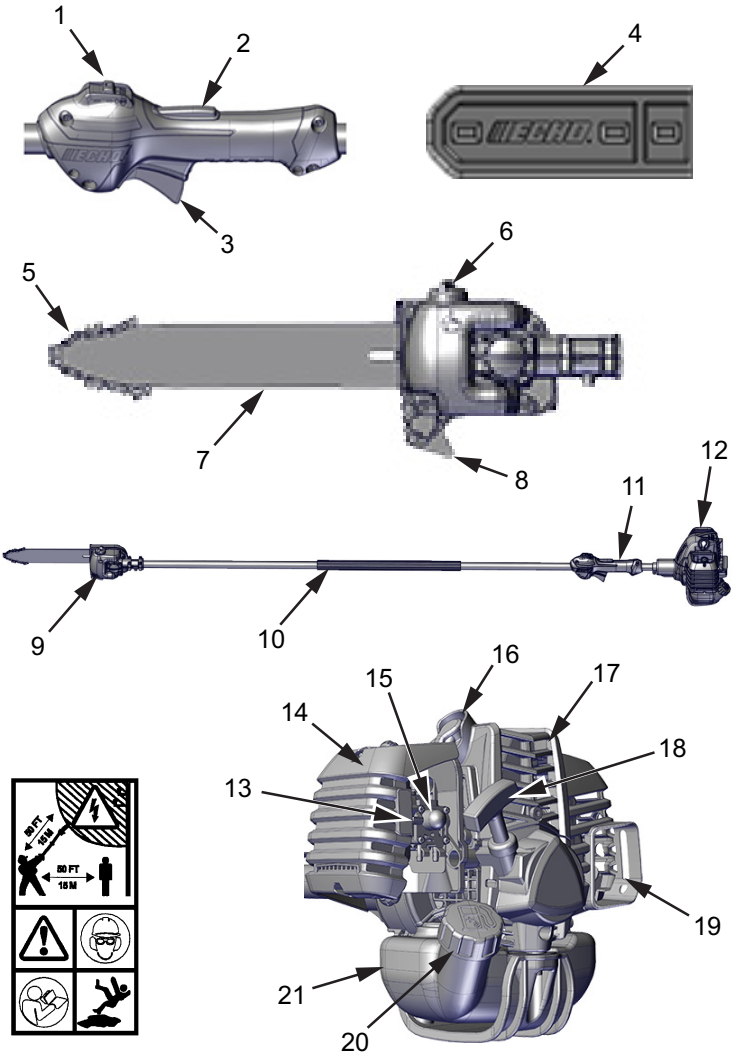

©01/24 ECHO Incorporated

1. Stop Switch
2. Throttle Trigger Lockout
3. Throttle Trigger
4. Guide Bar Cover
5. Saw Chain
6. Automatic Oiler Assembly
7. Guide Bar
8. Cutting Shoe
9. Cutting Attachment
10. Support Handle - For Left Hand
11. Throttle Handle - For Right Hand
12. Power Head
13. Choke
14. Air Cleaner
15. Purge Bulb
16. Spark Plug
17. Top Guard
18. Recoil Starter Handle
19. Spark Arrester Muffler or Spark Arrester Muffler with Catalyst
20. Fuel Tank Cap
21. Fuel Tank

©01/24 ECHO Incorporated

CONTENTS

The ECHO product you purchased has been factory pre-assembled for your convenience. Due to packaging restrictions, some assembly may be necessary.

After opening the carton, check for damage. Immediately notify your retailer or ECHO Dealer of damaged or missing parts. Use the contents list to check for missing parts.

1	Power Head / Drive Shaft Assembly
1	Cutting Attachment with Guide Bar & Saw Chain
1	Operator's Manual
1	Warranty Statement
1	Shoulder Harness
1	Guide Bar Cover

ASSEMBLY

Cutting Attachment to Drive Shaft Installation

Parts Required: Drive Shaft Assembly, Cutting Attachment.

WARNING

Saw Chain is sharp! Always wear gloves when handling assembly, otherwise serious personal injury may result.

1. Loosen the two (2) screws (A) and remove locator screw (B) on cutting attachment.
2. Remove the vinyl cap from the drive shaft.

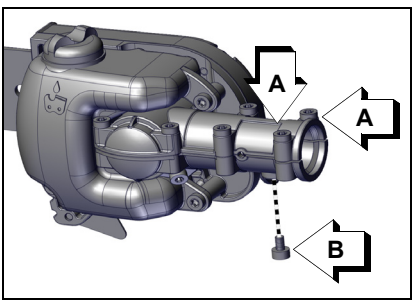

©01/24 ECHO Incorporated

3. Slide the cutting attachment onto the shaft housing until the hole in the neck of the cutting attachment is aligned with the hole (C) in the housing (it may be necessary to rotate the saw chain slightly to align the internal pinion and drive shaft).
4. Insert locator screw (B) into hole (C) and tighten to snug.

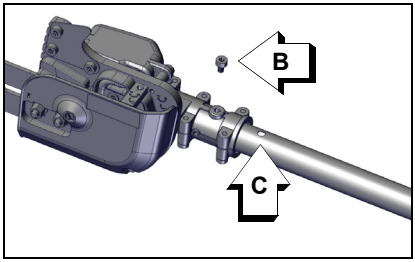

5. Tighten bolts (A), clamping the cutting attachment onto the housing.

Saw Chain Adjustment

WARNING

Always disconnect spark plug wire before servicing cutting attachment. Wear gloves when handling saw chain, otherwise serious personal injury may result.

Saw Chain Adjustment

1. Move stop switch to STOP position.
2. Disconnect spark plug lead.
3. Loosen two guide bar nuts (A) until finger tight.

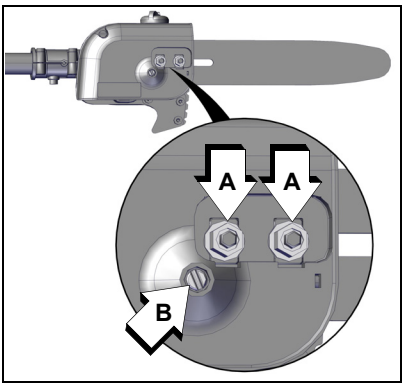

NOTICE

Always loosen guide bar nuts before turning the chain tension adjuster, otherwise the clutch cover and tensioner will be damaged.

4. Hold the bar nose up, and turn the adjuster screw (B) clockwise until the chain fits snugly against the underside of the bar, as shown. Cold Chain Only - turn adjuster screw CW an additional 1/8 - 1/4 turn. Tighten both guide bar nuts with nose held up. Tighten rear nut first..

©01/24 ECHO Incorporated

5. Pull the chain around the guide bar by hand. Reduce the chain tension if you feel tight spots.
6. When chain is properly tensioned, tighten guide bar nuts securely.

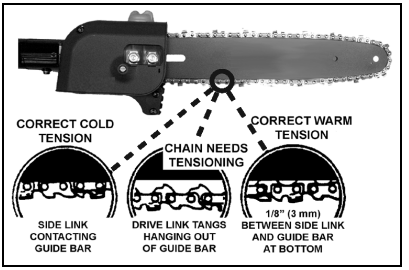

NOTICE

Tighten guide bar nuts to 8 - 9 N•m (71 - 80 in. lbs.). DO NOT over-tighten nuts or damage may result.

7. Keep chain properly tensioned at all times.

Note: All chains require frequent adjustment.

8. Connect spark plug lead.

OPERATION

⚠ WARNING

Moving parts can amputate fingers or cause severe injuries. Keep hands, clothing and loose objects away from all openings. Always stop engine, disconnect spark plug, and make sure all moving parts have come to a complete stop before removing obstructions, clearing debris, or servicing unit.

⚠ WARNING

Engine exhaust IS HOT, and contains Carbon Monoxide (CO), a poison gas. Breathing CO can cause unconsciousness, serious injury, or death. Exhaust can cause serious burns. ALWAYS position unit so that exhaust is directed away from your face and body.

©01/24 ECHO Incorporated

WARNING

Operation of this equipment may create sparks that can start fires around dry vegetation. This unit is equipped with a spark arrester to prevent discharge of hot particles from the engine. Metal cutters can also create sparks if the cutter strikes rocks, metal, or other hard objects. Contact local fire authorities for laws or regulations regarding fire prevention requirements.

Fuel

WARNING

Diesel fuels and alternative fuels, such as E-15 (15% ethanol), E-85 (85% ethanol) or any fuels not meeting ECHO requirements are NOT approved for use in ECHO 2-stroke gasoline engines. Use of diesel or alternative fuels can cause performance problems, loss of power, overheating, fuel vapor lock, and unintended machine operation, including, but not limited to, improper clutch engagement. Diesel or alternative fuels can also cause premature deterioration of fuel lines, gaskets, carburetors and other engine components.

Fuel Requirements

Gasoline - Use fresh (purchased within the last 30 days from the pump) 89 Octane [R+M/2] (mid grade or higher) gasoline known to be good quality. Gasoline may contain up to 10% Ethanol (grain alcohol) or 15% MTBE (methyl tertiary-butyl ether). Gasoline containing methanol (wood alcohol) is **NOT** approved. Use of ECHO branded fuel is recommended to extend engine life in all air-cooled 2-stroke and 2/4-stroke hybrid engines.

Two Stroke Oil - A two-stroke engine oil, such as ECHO branded 2-stroke oils, meeting ISO-L-EGD (ISO/CD 13738) and J.A.S.O. FD Standards must be used. ECHO branded 2-stroke oils meet these standards. Engine problems due to inadequate lubrication caused by failure to use an ISO-L-EGD (ISO/CD 13738) and J.A.S.O. M345-FD certified oil will void the two-stroke engine warranty.

©01/24 ECHO Incorporated

⚠ WARNING

2-Stroke engine oil contains petroleum distillates and other additives that may be harmful if swallowed. Heated oil can release vapors that can cause flash fire, or ignite with explosive force. Read and follow the oil manufacturer's instructions, and observe all safety warnings and precautions for handling flammable liquids. For more detailed safety and first aid information, visit www.echo-usa.com for a copy of the Material Safety Data Sheet.

- **KEEP OUT OF REACH OF CHILDREN.**
- **If swallowed, do not induce vomiting. CALL PHYSICIAN OR A POISON CONTROL CENTER IMMEDIATELY.**
- **WEAR SAFETY GLASSES when mixing or handling.**
- **AVOID repeated or prolonged skin contact.**
- **AVOID inhaling oil mists or vapors.**

NOTICE

ECHO branded 2-stroke oils may be mixed at 50:1 ratio for application in all ECHO engines sold in the past regardless of ratio specified in those manuals.

Handling Fuel

⚠ DANGER

Fuel is VERY flammable. Use extreme care when mixing, storing or handling, or serious personal injury will result.

- ***Use an approved fuel container. Mark fuel containers as containing 2-stroke mixture fuel.***
- ***DO NOT smoke near fuel.***
- ***DO NOT allow flames or sparks near fuel.***
- ***Fuel tanks/cans may be under pressure. Always loosen fuel caps slowly allowing pressure to equalize.***
- ***NEVER refuel a unit when the engine is HOT or RUNNING!***
- ***DO NOT fill fuel tanks indoors. ALWAYS fill fuel tanks outdoors over bare ground.***
- ***DO NOT overfill fuel tank. Wipe up spills immediately.***
- ***Securely tighten fuel tank cap and close fuel container after refueling.***

©01/24 ECHO Incorporated

- ***Inspect for fuel leakage. If fuel leakage is found, do not start or operate unit until leakage is repaired.***
- ***Use caution when handling fuel. Mix and pour fuel outdoors where there are no sparks and flames. Slowly remove the fuel cap only after stopping the engine and allowing the unit to cool. Do not smoke while fueling or mixing fuel. Move the unit at least 10 feet (3 m) from the fueling point before starting the engine.***

DANGER

Gasoline vapor is heavier than air, and can travel along the ground to nearby sources of ignition such as electrical motors, pilot lights, and hot or running engines. Vapors ignited by an ignition source can flash back to the fuel container, resulting in an explosion, fire, serious or fatal injuries, and extensive property damage.

Mixing Instructions

NOTICE

Stored fuel ages. Do not mix more fuel than you expect to use in 30 days, 90 days when a fuel stabilizer is added.

1. Fill an approved fuel container with half of the required amount of gasoline.
2. Add the proper amount of 2-stroke oil to gasoline.
3. Close container and shake to mix oil with gasoline.
4. Add remaining gasoline, close fuel container, and remix.

Fuel to Oil Mix – 50:1 Ratio			
US		Metric	
Gas	Oil	Gas	Oil
gal.	fl.oz.	L	cc
1	2.6	5	100
2	5.2	10	200
5	13	25	500

NOTICE

Spilled fuel is a leading cause of hydrocarbon emissions. Some locations may require the use of automatic fuel shut-off containers to reduce fuel spillage.

©01/24 ECHO Incorporated

Storage - Fuel storage laws vary by locality. Contact your local government for the laws affecting your area. As a precaution, store fuel in an approved, airtight container. Store in a well-ventilated, unoccupied building, away from sparks and flames.

- Empty the fuel tank prior to storing the unit. Return unused fuel to an approved fuel storage container.

NOTICE

Stored two-stroke fuel can separate. ALWAYS shake fuel container thoroughly before each use.

NOTICE

Used oil and gasoline, and soiled towels are hazardous waste materials. Disposal laws vary by locality.

Lubricating the Guide Bar and Saw Chain

Automatic Oiling System

NOTICE

To prevent plastic deterioration, do not use synthetic or silicone based oil.

1. Wipe debris from around oil fill cap.
2. Remove oil fill cap and fill reservoir with a quality, low viscosity guide bar and saw chain oil.

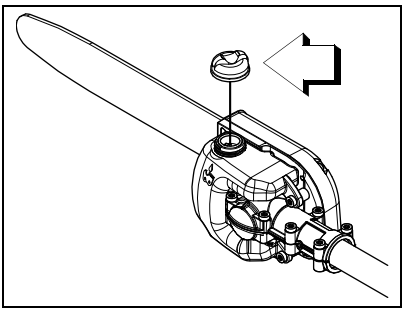

©01/24 ECHO Incorporated

Adjusting Automatic Oiler

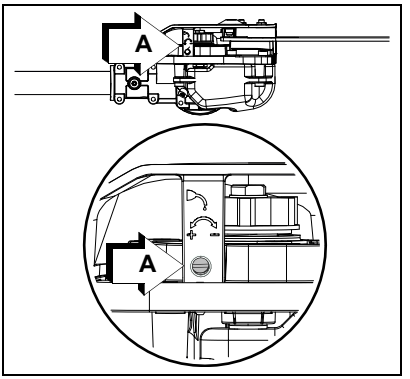

1. From bottom of gear case, turn adjustment screw (A) clockwise to decrease oil volume, or counterclockwise to increase oil volume.

Note: The automatic oiler is preset to deliver a sufficient oil discharge volume during normal operating conditions. During heavy or dry cutting conditions, the oil discharge volume may be increased to assure adequate lubrication. If oil is leaking from the bar cover area, reduce the oil discharge volume. Refill the oil reservoir with each tank of fuel.

Note: Very little visible oil on the saw chain will provide sufficient lubrication.

Starting Cold Engine

WARNING

The attachment will operate immediately when the engine starts, and could result in possible serious injury. Keep movable parts of the attachment away from objects that could become entangled or thrown, and surfaces that could cause loss of control.

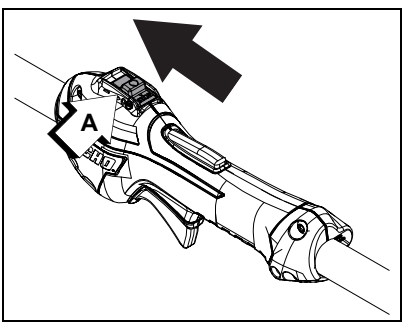

1. *Stop Switch*

   Move stop switch button (A) forward, away from the STOP position.

©01/24 ECHO Incorporated

2. *Choke*

   Move choke lever (B) to COLD START (|⚑|) position.

3. *Purge Bulb*

   Pump purge bulb (C) until fuel is visible and flows freely in the clear fuel tank return line. Pump bulb an additional four or five times.

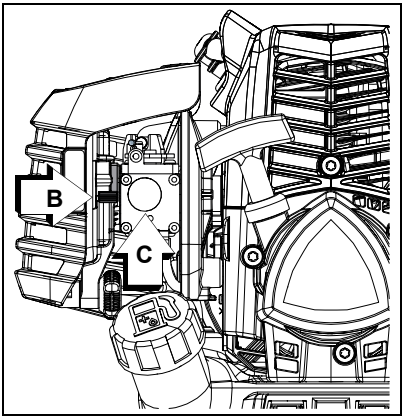

4. *Recoil Starter*

   Lay the unit on a flat area and keep movable attachment parts clear of all obstacles. Firmly grasp throttle handle and throttle trigger lockout with left hand and fully depress throttle trigger to wide open position. Rapidly pull recoil starter handle/rope (D) until engine fires (or maximum two to three pulls).

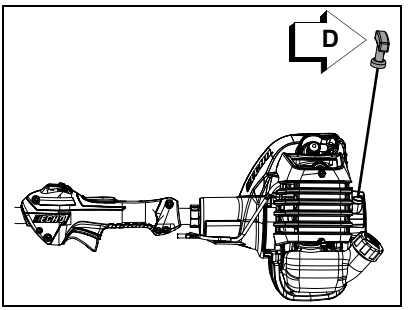

5. *Choke*

   After engine fires (or two to three pulls), move choke to the RUN (|⚘|) (open) position. Firmly grasp throttle handle and throttle trigger lockout with left hand and fully depress throttle trigger to wide open position. Pull starter handle/rope (D) until engine starts and runs. Release throttle trigger and allow unit to warm up at idle for several minutes.

Note: If engine does not start with choke in “RUN” position after two to three pulls, repeat instructions 2 - 5.

6. *Throttle Trigger*

   After engine warm-up, grip throttle handle and support handle. Depress the throttle trigger lockout, and gradually depress throttle trigger to increase engine RPM to operating speed.

©01/24 ECHO Incorporated

Starting Warm Engine

The starting procedure is the same as Cold Start except DO NOT close the choke, and do not hold throttle trigger fully depressed.

WARNING

The attachment should not move at idle, otherwise serious personal injury may result.

Note: If attachment moves, readjust carburetor according to “Carburetor Adjustment” instructions in this manual or see your ECHO Dealer.

1. *Stop Switch*

   Move stop switch button (A) forward away from the STOP position.

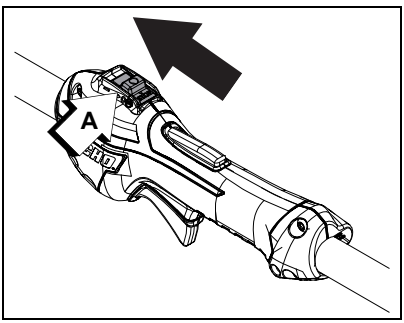

2. *Purge Bulb*

   Pump purge bulb (B) until fuel is visible in the “Clear” fuel return line. Pump bulb an additional four or five times.

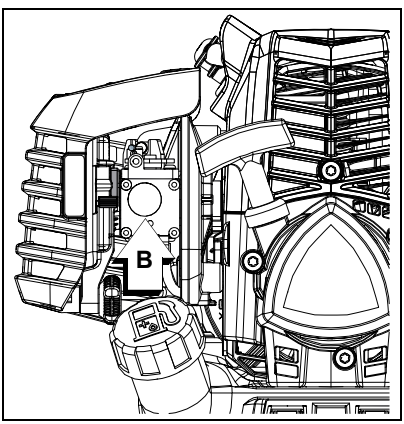

©01/24 ECHO Incorporated

3. *Recoil Starter*

   Lay the unit on a flat area and keep movable attachment parts clear of all obstacles. Firmly grip throttle handle and throttle trigger lockout with left hand. Rapidly pull recoil starter handle/rope (D) until engine fires.

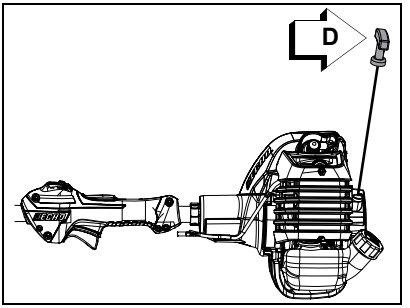

Note: If engine does not start after two to three pulls, use Cold Start Procedure.

Stopping Engine

1. *Throttle*

   Release throttle trigger and allow engine to return to idle before shutting off engine.

2. *Stop Switch*

   Move stop switch button (A) backward to STOP position.

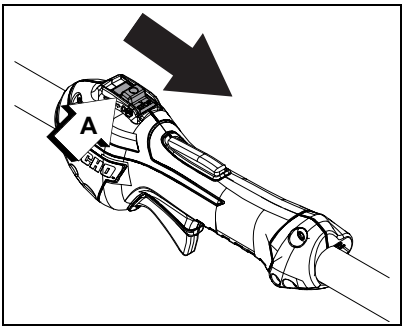

WARNING

If engine does not stop when stop switch is moved to STOP position, close choke - COLD START position - to stall engine. Have your ECHO dealer repair stop switch before using unit again.

Pruning Techniques

Shoulder Harness (if included)

1. Loosen the harness clamp screw (A).
2. Put the harness on and attach it to the clamp ring (B).
3. Adjust harness for comfortable operation.

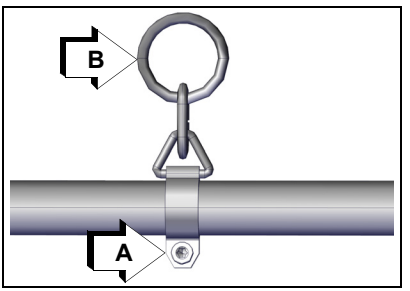

©01/24 ECHO Incorporated

4. Tighten harness clamp screw (A).

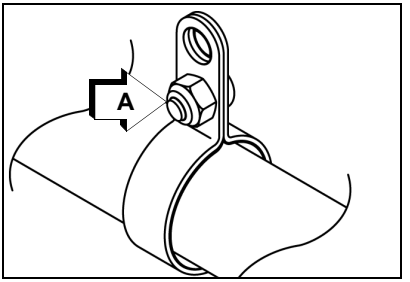

The pole pruner attachment is designed for light to medium trimming of limbs and branches up to 203 mm (8 in.) diameter. Follow these tips for successful operation.

- Plan cut carefully. Check direction branch will fall.
- Plan retreat path from falling branch. Cut branches bounce when striking ground.
- Long branches should be removed in several pieces.
- Do not stand directly beneath branch being cut.
- When ready to cut:
  Hold the cutting shoe against the branch. This will prevent whipping of the branch. DO NOT use back and forth sawing action.

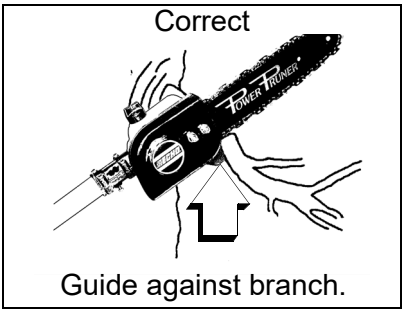

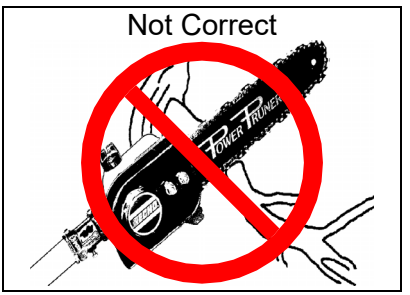

©01/24 ECHO Incorporated

- Look out for branches immediately behind the branch being cut. If saw chain hits a rear branch damage to the saw chain and guide bar may occur.
- Accelerate to full throttle.
- Ease cutting pressure when nearing end of cut to maintain control.
- When pruning a limb 102 mm (4 in.) diameter or larger cut as follows:

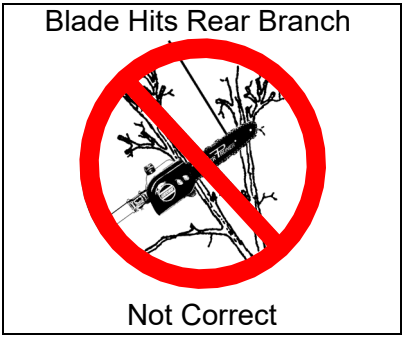

1. Under cut 1/4 limb diameter near tree trunk.
2. Finish top cut slightly farther out on limb.
3. Flush cut stub at trunk.

- DO NOT use for felling or bucking.

MAINTENANCE

WARNING

Moving parts can amputate fingers or cause severe injuries. Keep hands, clothing and loose objects away from all openings. Always stop engine, disconnect spark plug, and make sure all moving parts have come to a complete stop before removing obstructions, clearing debris, or servicing unit. Allow the unit to cool before performing maintenance or adjustments. Wear gloves to protect hands from sharp edges and hot surfaces.

WARNING

Operating a poorly maintained unit can result in serious injuries to operator or bystanders. Always follow all maintenance instructions as written, otherwise serious personal injury can result.

©01/24 ECHO Incorporated

Your unit is designed to provide many hours of trouble free service. Regular scheduled maintenance will help your unit achieve that goal. If you are unsure or are not equipped with the necessary tools, we recommend that you take your unit to a Servicing Dealer for maintenance. To help you decide whether you want to DO-IT-YOURSELF or have the Dealer do it, each maintenance task has been graded. If the task is not listed, see your Dealer for repairs.

NOTICE

The use of emission control components other than those specifically designed for this unit is a violation of federal law.

Skill Levels

Level 1 = Easy to do. Common tools may be required.

Level 2 = Moderate difficulty. Some specialized tools may be required.

Level 3 = See your dealer.

Click HERE or go to http://www.echo-usa.com/products/maintenance-kit

or

HERE https://www.shindaiwa-usa.com/you-can.aspx

Maintenance Intervals

COMPONENT/SYSTEM	MAINTENANCE PROCEDURE	SKILL LEVEL
Daily or Before Use		
Air Filter	Inspect/Clean*	**1**
Choke Shutter	Inspect/Clean*	**1**
Fuel System	Inspect [2]	**1**
Cooling System	Inspect/Clean	**2**
Recoil Starter Rope	Inspect/Clean*	**1**
Screws/Nuts/Bolts	Inspect/Tighten/Replace*	**1**
Guide Bar/Sprocket Nose	Inspect/Clean/Lubricate*	**2**
Saw Chain	Inspect/Sharpen/Replace/Tension*	**2**
Every Refuel		
Fuel System	Inspect [2]	**1**
Guide Bar/Sprocket Nose	Inspect/Clean/Lubricate*	**2**

©01/24 ECHO Incorporated

COMPONENT/SYSTEM	MAINTENANCE PROCEDURE	SKILL LEVEL
Saw Chain	Inspect/Sharpen/Replace/Tension*	**2**
3 Months		
Air Filter	Replace*	**1**
Fuel Filter	Inspect*	**1**
Fuel Cap Gasket	Inspect*	**1**
Spark Plug	Inspect/Clean/Replace*	**1**
Muffler Spark Arrestor	Inspect/Clean/Replace*	**2**
Cylinder Exhaust Port	Inspect/Clean/De-carbon	**2**
Drive Shaft (Flex Cable Models)	Grease [1]	**2**
Yearly		
Fuel Filter	Inspect/Replace*	**1**
Fuel Cap Gasket	Replace*	**1**

IMPORTANT NOTE - Time intervals shown are maximum. Actual use and your experience will determine the frequency of required maintenance.

MAINTENANCE PROCEDURE NOTES:

[1] Apply lithium based grease every 25 hours of use.

[2] Low evaporative fuel tanks DO NOT require regular maintenance to maintain emission integrity.

* Replacement is recommended based on the finding of damage or wear during inspection.

©01/24 ECHO Incorporated

Air Filter

Level 1

Parts required: Tune Up Kit.

1. Close choke (COLD START position). This prevents dirt from entering the carburetor throat when the air filter is removed. Brush accumulated dirt from air cleaner area.
2. Remove air filter cover. Brush dirt from inside cover.

NOTICE

Assure throttle wire retaining clip (A) remains in place as shown when removing or installing air filter cover.

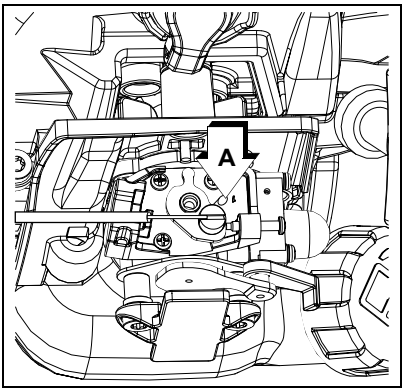

3. Remove foam pre-filter (B) and air filter (C) and clean as indicated below:
4. Foam pre-filter.
   - Clean foam filter in water/ detergent solution and rinse with clean water.
   - Wrap the filter in a clean, dry cloth and squeeze (do not wring) dry. Allow to dry completely before reuse. Do not oil.

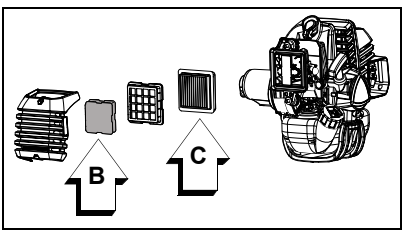

Air Filter

   - Lightly brush debris from filter. Replace filter if it is damaged, fuel soaked, very dirty, or the rubber sealing edges are deformed.
5. Assemble components in reverse order.

©01/24 ECHO Incorporated

NOTICE

Assure air filter is assembled with pleats oriented vertically.

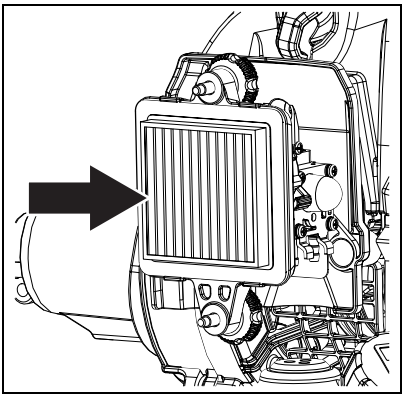

Fuel Filter

Level 1.

Parts required: Tune Up Kit.

DANGER

Fuel is VERY flammable. Use extreme care when mixing, storing or handling, or serious personal injury may result.

NOTICE

Do not damage fuel line while removing fuel filter from tank.

1. Use a clean rag to remove loose dirt from around fuel cap and empty fuel tank.
2. Pull fuel filter out through gas port, and inspect fuel filter.
3. When the fuel filter is dirty, replace it as follows:
4. Do not remove the wire coil clamp to remove the fuel filter. Pinch the fuel filter with the fingers on one hand and the fuel line with the other hand. Pull and twist slightly to separate.
5. Install the new fuel filter with the reverse action.

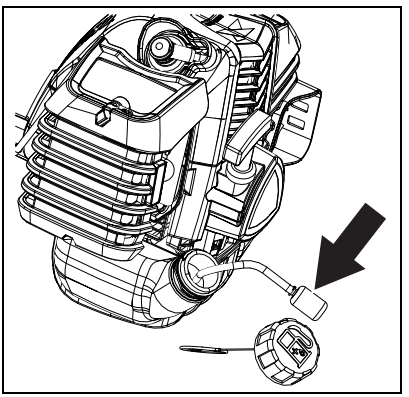

©01/24 ECHO Incorporated

6. When the inside of the fuel tank is dirty, rinse the tank out with gasoline to clean it.

Note: Federal EPA regulations require all model year 2012 and later gasoline powered engines produced for sale in the United States to be equipped with a special low permeation fuel supply hose between the carburetor and fuel tank. When servicing model year 2012 and later equipment, only fuel supply hoses certified by EPA can be used to replace the original equipment supply hose. Fines up to $37,500 may be enforced for using an un-certified replacement part.

Spark Plug

Level 2.

Parts required: Tune Up Kit.

NOTICE

Use only NGK CMR7H spark plug otherwise severe engine damage may occur.

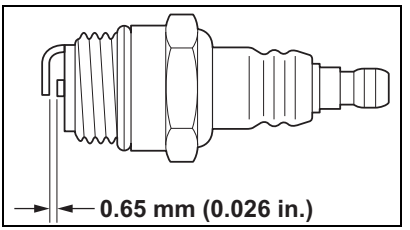

1. Remove spark plug and check for fouling, worn and rounded center electrode.
2. Clean the plug or replace with a new one. DO NOT sand blast to clean. Remaining sand will damage engine.
3. Adjust spark plug gap by bending outer electrode.
4. Tighten spark plug to 102-153 kgf•cm (89-133 lbf•in).

©01/24 ECHO Incorporated

Cooling System

Level 2.

NOTICE

To maintain proper engine operating temperatures, cooling air must pass freely through the cylinder fin area. This flow of air carries combustion heat away from the engine.

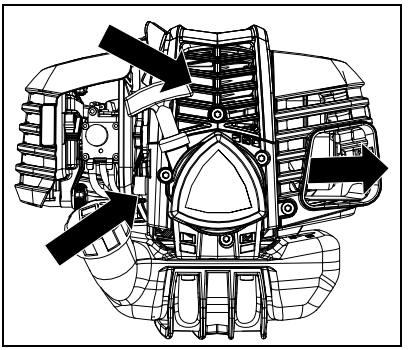

Overheating and engine seizure can occur when:

- Air intakes are blocked, preventing cooling air from reaching the cylinder.
- Dust and grass build up on the outside of the cylinder. This build up insulates the engine and prevents the heat from leaving.

Removal of cooling passage blockages or cleaning of cooling fins is considered “Normal Maintenance”. Any failure attributed to lack of maintenance is not covered by the warranty.

1. Remove spark plug lead.
2. Remove muffler cover (A).
3. Remove engine cover (B).

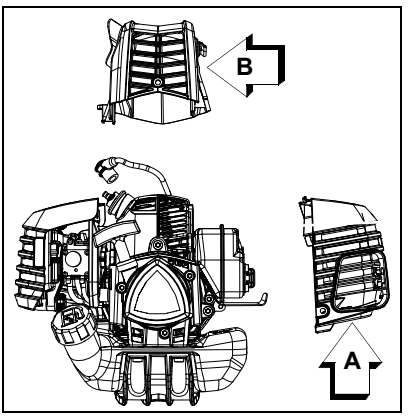

NOTICE

DO NOT use a metal scraper to remove dirt from the cylinder fins.

©01/24 ECHO Incorporated

4. Use brush to remove dirt from the cylinder fins.
5. Remove the air filter cover. Remove grass and leaves from the grid (C) between the recoil starter and fuel tank.
6. Assemble components in reverse order.

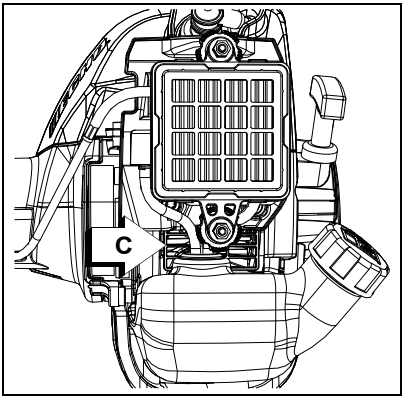

Exhaust System

Spark Arrester Screen

Level 2.

Parts required: Spark Arrester Screen, Gasket.

1. Remove spark plug lead.
2. Remove muffler cover (A).
3. Place piston at Top Dead Center (TDC) to prevent carbon or dirt from entering cylinder.
4. Remove spark arrester screen cover (B), gasket (C), and screen (D), from muffler body.
5. Clean carbon deposits from muffler components.

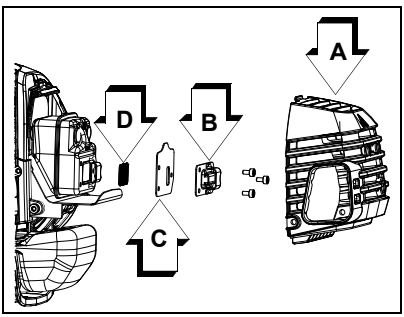

Note: When cleaning carbon deposit, be careful not to damage the catalytic element inside muffler.

6. Replace screen if it is cracked, plugged, or has holes burned through.
7. Assemble components in reverse order.

©01/24 ECHO Incorporated

Exhaust Port Cleaning

Level 2.

Parts required: Heat Shield (as needed).

1. Remove spark plug lead from spark plug, and remove muffler cover.
2. Place piston at top dead center. Remove muffler (A) and heat shield (B).
3. Use a wood or plastic scraping tool to clean deposits from cylinder exhaust port (C).

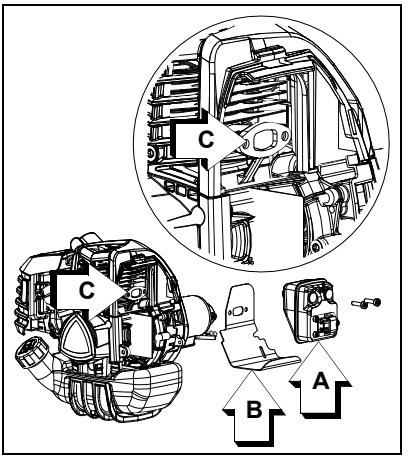

NOTICE

Never use a metal tool to scrape carbon from the exhaust port. Do not scratch the cylinder or piston when cleaning the exhaust port. Do not allow carbon particles to enter the cylinder.

4. Inspect heat shield, and replace if damaged.
5. Install heat shield and muffler.
6. Tighten muffler mounting bolts (or nuts) to 90-110 kgf•cm (80-95 lbf•in).
7. Install muffler cover and attach spark plug lead.
8. Start engine, and warm to operating temperature.
9. Stop engine, and re-tighten mounting bolts (or nuts) to specifications.

©01/24 ECHO Incorporated

Carburetor Adjustment

Level 2.

WARNING

When carburetor adjustment is completed, the cutting attachment should not move at idle, otherwise serious personal injury may result.

Engine Break-In

New engines must be operated a minimum duration of two tanks of fuel break-in before carburetor adjustments can be made. During the break-in period your engine performance will increase and exhaust emissions will stabilize. Idle speed can be adjusted as required.

High Altitude Operation

This engine has been factory adjusted to maintain satisfactory starting and durability performance up to 330 m (1,100 ft.) above sea level (ASL). To maintain proper engine operation above 330 m (1,100 ft.) ASL the carburetor may need to be adjusted by an authorized service dealer.

NOTICE

If the engine is adjusted for operation above 330 m (1,100 ft.) ASL, the carburetor must be re-adjusted when operating the engine below 330 m (1,100 ft.) ASL, otherwise severe engine damage may result.

Note: Every unit is run at the factory and the carburetor is set in compliance with emission regulations. Carburetor adjustments, other than idle speed, must be performed by an authorized dealer.

WARNING

- **The cutting attachment may be moving during carburetor adjustments.**
- **Wear your protective equipment and observe all safety instructions.**
- **For units equipped with a clutch, be sure the cutting attachment stops moving when the engine idles.**
- **When the unit is turned off, make sure the cutting attachment has stopped before the unit is set down.**

©01/24 ECHO Incorporated

1. Check idle speed and reset if necessary. If a tachometer is available, idle speed screw (A) should be set to the specifications found on “Specifications” page of this manual. Turn idle screw (A) clockwise to increase idle speed; counterclockwise to decrease idle speed.

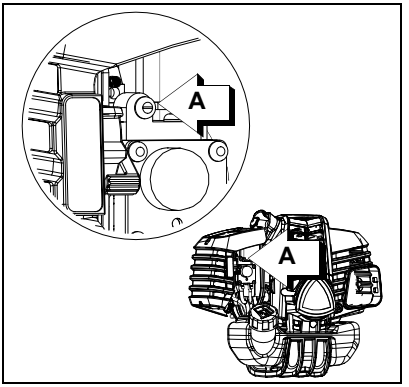

Lubrication

Drive Shaft

Level 1.

Parts required: Lithium Based Grease.

1. Remove cutting attachment locater screw (A).
2. Loosen two bolts (B).
3. Remove cutting attachment assembly.

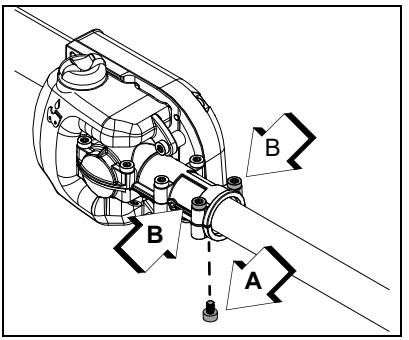

4. Remove flex cable (C), wipe clean and apply 15 ml (0.5 oz.) of lithium based grease.
5. Slide the flexible cable back in the drive housing. DO NOT get dirt on the flex cable.
6. Install and secure cutting attachment assembly.

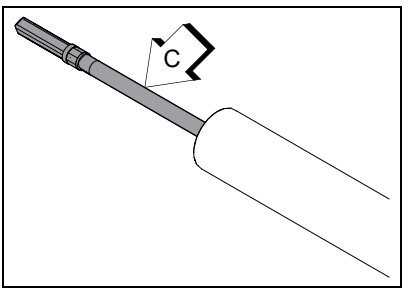

©01/24 ECHO Incorporated

Guide Bar and Saw Chain Replacement

WARNING

Never try to replace or adjust guide bar and saw chain with engine running. Always disconnect spark plug wire before servicing guide bar and saw chain. This saw chain is VERY sharp, wear heavy gloves to protect your hands when handling it. Wear eye protection meeting CE or ANSI specification Z87.1.

Guide Bar Replacement

Level 2.

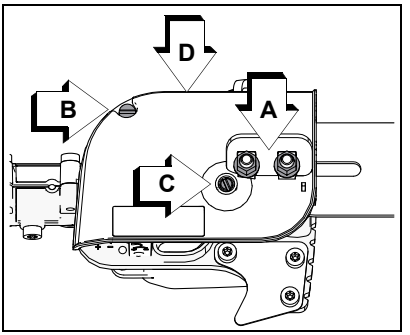

1. Remove two guide bar nuts (A) and guide bar cover screw (B), turn saw chain tension adjustment screw (C) counterclockwise to release tension.
2. Remove guide bar cover (D).
3. Remove guide bar and saw chain from gear case and sprocket.
4. Remove chain from guide bar and check guide bar for damage and excessive or uneven wear. Replace guide bar if necessary
5. Install chain on guide bar with cutters on top of bar facing toward bar tip.

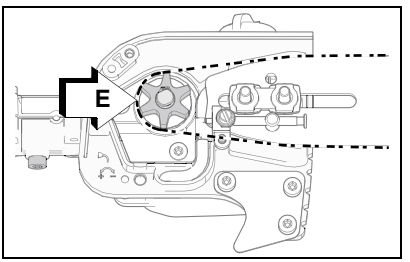

6. Install guide bar and chain on gear case, engaging chain with drive sprocket (E).
7. Turn tension adjustment screw (C) clockwise to take up slack in saw chain.
8. Install guide bar cover (D), and tighten guide bar nuts finger tight and install guide bar cover screw (B).
9. Adjust chain tension.

©01/24 ECHO Incorporated

Guide Bar Cover Cleaning

1. Remove two guide bar nuts (A) and guide bar cover screw (B).
2. Remove guide bar cover (D).

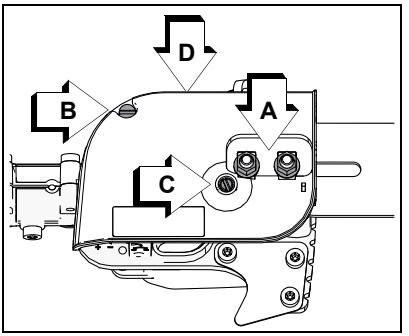

3. Gently brush debris from inside guide bar cover and from around sprocket.

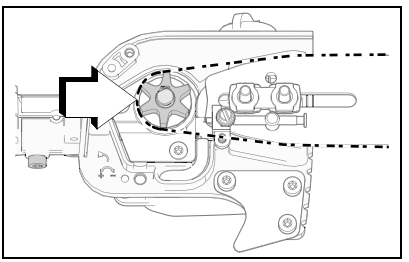

4. Hold the bar nose up. Install guide bar cover (D). Install the guide bar nuts (A). Tighten the rear nut first, then tighten the front nut. Install and tighten the guide bar cover screw (B)

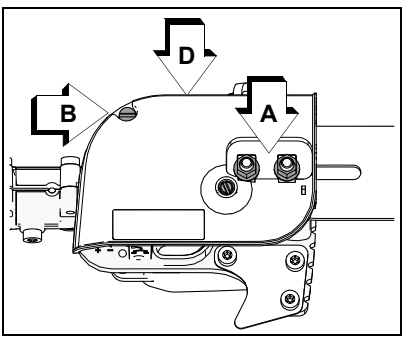

©01/24 ECHO Incorporated

Filing Standard Saw Chain

Level 2

Power Pruner® Bar and Chain Combinations					
BAR P/N	**CHAIN P/N**	**CHAIN TYPE**	**LINKS**	**PITCH**	**GAUGE**
Narrow Kerf					
254 mm (10 in.) narrow bar P/N 10A4CD3739	90PX39CQ	90	39	0.375 in.	0.043 in.
305 mm (12 in.) narrow bar P/N 12A4CD3744	90PX44CQ		44		
Regular					
254 mm (10 in.) regular bar P/N 10A0CD3739	91VXL39CQ	91	39	0.375 in.	0.050 in.
305 mm (12 in.) regular bar P/N 12A0CD3744	91VXL44CQ		44		

NOTICE

Check bar part number on your Power Pruner. Chain and guide bar gauge size must be identical. Use bar and chain combinations shown in table above.

NOTICE

Dull or damaged cutters will result in poor cutting performance, increased vibration, and premature saw chain failure.

⚠ WARNING

Always stop engine and disconnect spark plug wire before servicing guide bar and saw chain. Always wear gloves when filing saw chain, otherwise serious personal injury may result.

1. Use a 4.5 mm round file for a 0.043 in. gauge saw chain. Use a 5/32 in. round file for 0.050 in. gauge saw chain.

©01/24 ECHO Incorporated

2. Set round file in cutter at 30° angle. One fifth (1/5) of the file should be exposed above top cutter edge.

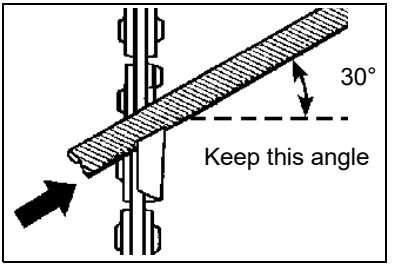

3. Keep file horizontal in cutter and file in one direction.

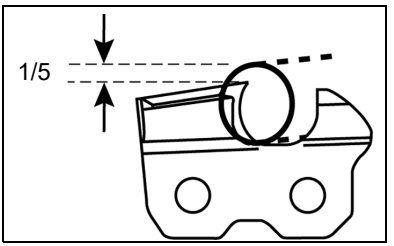

4. File until cutter top and side bevel edges are sharp without nicks.

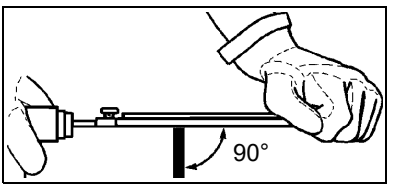

5. Place depth gauge tool firmly on top of cutter with 0.635 mm (0.025 in.) slot and end against front cutter raker. File cutter raker with flat file until flush with top of depth gauge.

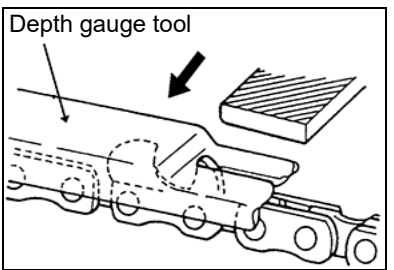

6. Finish cutter sharpening by rounding front raker edge with flat file.

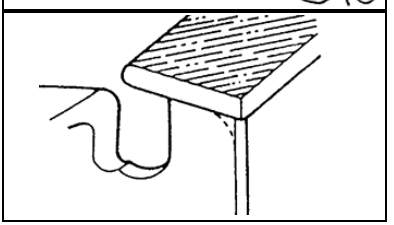

©01/24 ECHO Incorporated

7. Properly filed cutter is as shown.
8. Apply clean oil and rotate saw chain slowly to wash away filings.
9. If saw chain is coated or clogged with resin, clean in kerosene, then soak in oil.

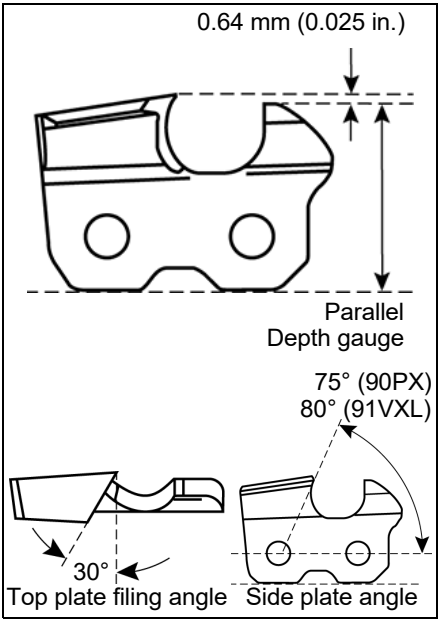

©01/24 ECHO Incorporated

TROUBLESHOOTING

ENGINE PROBLEM TROUBLESHOOTING CHART				
Problem	**Check**	**Status**	**Cause**	**Remedy**
Engine starts hard or Engine does not start	Fuel at carburetor	No fuel at carburetor	Fuel strainer or fuel line obstructed	Clean or replace See your dealer
	Fuel at cylinder	No fuel at cylinder	Carburetor	See your dealer
		Muffler wet with fuel	Fuel mixture too rich	OPEN choke Clean or replace air filter Adjust carburetor See your dealer
	Spark at end of plug wire	No spark	STOP switch OFF - Electrical problem - Interlock switch	Turn switch to ON See your dealer
	Spark at plug		Incorrect gap - Covered with carbon - Fouled with fuel - Plug defective	Adjust to 0.65 mm (0.026 in.) Clean or replace plug
Engine runs, but dies or Engine does not accelerate properly	Air filter	Air filter dirty	Normal wear	Clean or replace
	Fuel filter	Fuel filter dirty	Contaminants or residue in fuel	Replace filter or replace fuel
	Fuel vent	Fuel vent plugged	Contaminated fuel	Clean or replace

©01/24 ECHO Incorporated

ENGINE PROBLEM TROUBLESHOOTING CHART				
Problem	**Check**	**Status**	**Cause**	**Remedy**
Engine runs, but dies or Engine does not accelerate properly	Spark plug	Plug dirty or worn	Normal wear	Clean and adjust or replace
	Carburetor	Improper adjustment	Vibration	Adjust
	Cooling system	Cooling system dirty or plugged	Extended operation in dirty or dusty locations	Clean
	Spark arrester screen	Spark arrester screen plugged	Normal wear	Replace
Engine does not crank	N/A		Internal engine problem	See your dealer

DANGER

Fuel vapors are extremely flammable and can cause fire and/or explosion. Never test for ignition spark by grounding spark plug near cylinder plug hole, otherwise serious personal injury can result.

STORAGE

WARNING

During operation the muffler or catalytic muffler and surrounding cover become hot. Always keep exhaust area clear of flammable debris during transportation or when storing, otherwise serious property damage or personal injury may result.

Long Term Storage (Over 30 Days)

Do not store your unit for a prolonged period of time (30 days or longer) without performing protective storage maintenance which includes the following:

1. Store unit in a dry, dust free place, out of the reach of children.

©01/24 ECHO Incorporated

DANGER

Do not store in enclosure where fuel fumes may accumulate or reach an open flame or spark.

2. Place the stop switch in the “OFF” position.
3. Remove accumulation of grease, oil, dirt and debris from exterior of unit.

NOTICE

Some tree sap and resins are corrosive. Thoroughly wash the guide bar and sprocket areas after each use, then coat metal parts with light oil.

4. Perform all periodic lubrication and services that are required.
5. Tighten all the screws and nuts.
6. Drain fuel tank completely. Press purge bulb 6–7 times to remove remaining fuel from carburetor then drain the tank again. Close choke, start and run the engine until it stops due to lack of fuel.
7. Allow engine to cool. Remove the spark plug lead from the spark plug. Remove the spark plug. Pour 7 cc (0.25 oz.) of fresh, clean, two-stroke engine oil into the cylinder through the spark plug hole.
8. Pull the recoil starter handle 2-3 times to distribute the oil inside the engine.
9. Observe the piston location through the spark plug hole. Pull the recoil handle slowly until the piston reaches the top of its travel and leave it there.
10. Install the spark plug. Connect the spark plug lead to the spark plug.

©01/24 ECHO Incorporated

SPECIFICATIONS

Model	PPF-2620
Length	2,450 mm (96.4 in.)
Width	273 mm (11 in.)
Height	260 mm (10 in.)
Weight (dry)	6.8 kg (15 lb.)
Engine Type	Air-cooled, two-stroke, single cylinder gasoline engine
Bore	34 mm (1.34 in.)
Stroke	28 mm (1.10 in.)
Displacement	25.4 cc (1.55 in.^{3})
Exhaust	Spark arrester muffler or spark arrester muffler with catalyst
Carburetor	Diaphragm with purge pump
Ignition System	Flywheel magneto, capacitor discharge ignition type
Spark Plug	NGK CMR7H - Gap 0.6 - 0.7 mm (0.024 - 0.026 in.)
Fuel	Mixed (gasoline and two-stroke oil)
Fuel/Oil Ratio	50:1
Gasoline	Use 89 Octane unleaded. Do not use fuel containing methyl alcohol, more than 10% ethyl alcohol or 15% MTBE. Do not use alternative fuels such as E15 or E85.
Oil	ISO-L-EGD (ISO/CD 13738) and J.A.S.O. M345- FD, two-stroke, air-cooled engine oil.
Fuel Tank Capacity	0.61 L (20.6 US fl. oz.)
Starter System	Automatic rewind starter
Clutch	Centrifugal type
Drive Shaft	6.35 mm (0.25 in.) flexible shaft
Sprocket Type	6 tooth spur, 9.53 mm (3/8 inch) pitch
Shaft Tube Assembly	25 mm (1 in.) galvanized steel
Gear Case Ratio	1.53:1
Oiling System	Automatic

©01/24 ECHO Incorporated

Model	PPF-2620
Chain Oil Capacity	0.20 L (6.76 oz.)
Handles	Right - hand grip with throttle trigger and throttle trigger lockout / Left - foam hand grip
Shoulder Harness	Standard
Idle Speed	2,750 RPM
Clutch Engagement Speed	4,300 RPM
Wide Open Throttle Speed	10,900 RPM
Guide Bar and Saw Chain (91)	305 mm (12 in.); 9.53 mm (3/8 inch) pitch chain, 0.050 gauge

PRODUCT REGISTRATION

Thank you for choosing ECHO Power Equipment

Please go to http://www.echo-usa.com/Warranty/Register-Your-ECHO to register your new product on-line. It's ***FAST*** and ***EASY***! NOTE: your information will never be sold or misused by ECHO, Incorporated. Registering your purchase enables us to contact you in the unlikely event of a service update or product recall, and verifies your ownership for warranty consideration.

If you do not have access to the Internet, you can complete the form below and mail to:

ECHO Incorporated, Product Registration, PO Box 1139,
Lake Zurich, IL 60047.

©01/24 ECHO Incorporated

PRODUCT REGISTRATION CARD : TARJETA DE REGISTRO : CARTE D'ENREGISTREMENT DU PRODUIT

ONLINE OPTION: Register online and save a stamp! You will be alerted of product updates and/or be sent new ECHO product information and special offers. Simply go to: **www.echo-usa.com**

OPCIÓN POR INTERNET: ¡Registrese en la pagina web y ahorre una estampilla! Le alertarán sobre actualizaciones del producto y/o se le enviara información sobre los nuevos productos ECHO y las ofertas especiales. Simplemente visite: **www.echo-usa.com**

OPTION EN LIGNE : Enregistrer en ligne et épargner un timbre! Vous serez informé sur les nouveaux produits ECHO et les mises à jour de produit ainsi que les offres spéciales. Simplement visitez le: **www.echo-usa.com**

Please Print : Por Favor Enscriba Con Letra De Molde : En Lettre Carré S.V.P.

Confidential: Information provided will not be shared or sold

Purchaser's Name : Nombre del Comprador : Nom de l'acheteur		
Address : Dirección : Adresse		
City : Ciudad : Ville	*State : Estado : Province*	*Zip Code : Código Postal : Code Postal*
E-Mail Address : Dirección De Correo Electrónico : Courrier Électronique		
Phone Number : Número De Teléfono : Téléphone	*Date of Purchase : Fecha de la Compra : Date de l'achat*	
Where Purchased : Nombre del Almacén donde fue Comprado : Lieu d'achat		

Model Number : Numero del Modelo : No. de modéle	*Serial Number : Numero de Serie : No. de série*

Registering your purchase enables us to contact you in the unlikely event of a service update or product recall and verifies your ownership in the event of loss. : El registrar su compra nos permite estar en contacto con usted en caso de cualquier evento como el aviso de tiempo de servicio o la revocación del producto y verificación de propiedad en caso de robo o pérdida. : L'enregistrement de votre achat nous permettra de vous contacter dans le cas improbable de modifications des instructions d'entretien ou de rappel du produit et vérifier que vous êtes le propriétaire en cas de vol ou de perte.

Primary use of tool: ☐ Professional ☐ Homeowner ☐ Rental Equip.
Uso primario de la herramienta: ☐ Profesional ☐ Dueño de casa ☐ Alquiler
Usage principal : ☐ Professionnel ☐ Residential ☐ Location

Do you wish to receive periodic ECHO product information and special offers by e-mail? ☐ Yes ☐ No
¿Desea usted recibir información periódica y ofertas especiales por correo electronico sobre el producto ECHO? ☐ Yes ☐ No
Souhaitez-vous recevoir périodiquement de l'information sur les produits ECHO et les offres spéciales par courrier électronique ? ☐ Oui ☐ Non

Did you visit the ECHO website before purchasing your product?
☐ Yes ☐ No
Visitó usted la pagina web ECHO antes de comprar su producto?
☐ Si ☐ No
Avez-vous visité le site d'ECHO avant de procurer votre produit?
☐ Oui ☐ Non

What factor(s) most influenced your purchase?

☐ Performance	☐ Price	☐ Dealer
☐ Reliability	☐ Prior Experience	☐ Quality
☐ Friend/Family	☐ Brand	☐ Warranty

¿Qué factor(es) influenció más en su compra?

☐ Funcionamiento	☐ Precio	☐ Distribuidor
☐ Confiabilidad	☐ Experiencia Anterior	☐ Calidad
☐ Amigo/Familia	☐ Marca	☐ Garantía

Quel facteur (facteurs) vous a influencé le plus?

☐ Performance	☐ Prix	☐ Marchand
☐ Fiabilité	☐ Expérience	☐ Qualité
☐ Ami/Famille	☐ Marque	☐ Garantie

ECHO Incorporated 400 Oakwood Rd., Lake Zurich, IL 60047
1.800.432.ECHO WWW.ECHO-USA.COM

X7572270206 02-2012

©01/24 ECHO Incorporated

V00912001001 - V00912999999
V01013001001 - V01013999999

ECHO INCORPORATED
400 Oakwood Road
Lake Zurich, IL 60047
www.echo-usa.com