Operator's Manual CS-590 Chainsaw

⚠ WARNING

The engine exhaust from this product contains chemicals known to the State of California to cause cancer, birth defects, or other reproductive harm.

⚠ WARNING

Read and understand all provided literature before use. Failure to do so could result in serious injury.

Note: This product complies with CAN ICES-2/NMB-2.

X7503266701

© 02/25 ECHO Incorporated

TABLE OF CONTENTS

Introduction 3
Servicing Information 4
Parts and Serial Number 4
Service 4
Consumer Product Support 4
Product Registration 4
Additional Literature 4
Safety 5
Manual Safety Symbols and Important Information 5
International Symbols 6
Personal Condition and Safety Equipment 8
Rules for Safe Operation 12
Correct Use of Chain Brake 13
Emission Control 19
EPA Emission Control Information 19
Description 20
Contents 22
Assembly 22
Preparation for Use 22
Operation 25
Fuel 26
Chain Lubricant 29
Starting Cold Engine 30
Starting Warm Engine 32
Running 33
Stopping 34
Checking Chain Tension 34
Chain Lubrication Test 34
Cutting Instructions 35
Guide Bar and Chain Combination 39
Kick Guard™ 39
Guide Bar 40
Maintenance 40
Skill Levels 41
Maintenance Intervals 41
Air Filter 42
Spark Plug 43
Check Fuel System 43
Fuel Filter 43
Oil Filter 44
Automatic Oiler 45
Guide Bar 45
Sprocket 45
Cooling System Cleaning 46
Spark Arrester Muffler 46
Spark Arrester Screen 47
Carburetor Adjustment 47
Setting the Saw Chain 49
Troubleshooting 51
Storage 53
Storage After Use 53
Specifications 54
Product Registration 56

© 02/25 ECHO Incorporated

INTRODUCTION

Specifications, descriptions, and illustrative material in this literature are as accurate as possible. Specifications are subject to change without notice. Illustrations might include optional equipment and accessories, and might not include all standard equipment. Your equipment might appear slightly different than pictured equipment.

Read and understand all provided literature. Literature contains specifications and information for safety, operation, maintenance, storage, and assembly specific to this product. Scan QR codes for more information.

For additional literature, including safety manuals where applicable, or questions regarding terms used in this manual, visit:

https://www.echo-usa.com/manuals

OR

https://www.shindaiwa-usa.com/manuals

© 02/25 ECHO Incorporated

SERVICING INFORMATION

Parts and Serial Number

Genuine Shindaiwa Parts and Assemblies for your Shindaiwa products are available only from an Authorized Shindaiwa Dealer. When you do need to buy parts always have the Model Number and Serial Number of the unit with you. Image shows serial number location. For future reference, write them in the space provided below.

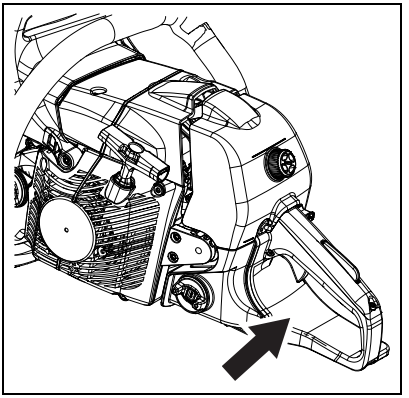

Model No. _____ Serial No. _____

Service

Service of this product during the warranty period must be performed by an Authorized Shindaiwa Service Dealer. For the name and address of the Authorized Shindaiwa Service Dealer nearest you, ask your retailer or call: 1-877-986-7783. Dealer information is also available on www.shindaiwa-usa.com. When presenting your unit for Warranty service/repairs, proof of purchase is required.

Consumer Product Support

If you require assistance or have questions concerning the application, operation or maintenance of this product you may call the Shindaiwa Consumer Product Support Department at 1-877-986-7783 from 8:00 am to 5:00 pm (Central Standard Time) Monday through Friday. Before calling, please know the model and serial number of your unit.

Product Registration

To ensure trouble free warranty coverage it is important that you register your Shindaiwa equipment on-line at www.shindaiwa-usa.com or by filling out the product registration sheet included in this manual. Registering your product confirms your warranty coverage and provides a direct link between you and ECHO if we find it necessary to contact you.

Additional Literature

In addition to finding information online, information is available from your Authorized Shindaiwa Service Dealer, or by contacting ECHO Incorporated, 400 Oakwood Road, Lake Zurich, IL 60047, 1-800-432-ECHO (3246).

© 02/25 ECHO Incorporated

SAFETY

Manual Safety Symbols and Important Information

Throughout this manual and on the product itself, you will find safety alerts and helpful, informational messages preceded by symbols or key words. The following is an explanation of those symbols and key words and what they mean to you.

DANGER

The safety alert symbol accompanied by the word "DANGER" calls attention to an act or condition which WILL lead to serious personal injury or death if not avoided.

WARNING

The safety alert symbol accompanied by the word "WARNING" calls attention to an act or condition which CAN lead to serious personal injury or death if not avoided.

CAUTION

The safety alert symbol accompanied by the word "CAUTION" calls attention to an act or condition which might lead to minor or moderate personal injury if not avoided.

NOTICE

The enclosed message provides information necessary for the protection of the unit.

Note: This enclosed message provides tips for use, care and maintenance of the unit.

CIRCLE AND SLASH SYMBOL
This symbol means the specific action shown is prohibited. Ignoring these prohibitions can result in serious or fatal injury.

© 02/25 ECHO Incorporated

International Symbols

Symbol	Description	Symbol	Description
	WARNING! Read and follow all safety precautions in the instruction manual. Failure to follow instructions could result in serious personal injury.	H	Carburetor Adjustment - High Speed Mixture
	Wear Eye, Ear, and Head Protection.	T	Carburetor Adjustment - Idle Speed
	Tip contact may cause the guide bar to move suddenly upward and backward, which may cause serious injury.	L	Carburetor Adjustment - Low Speed Mixture
	Contact of the guide bar tip with any object should be avoided.	Max XX°	Measured maximum kickback value, without brake, for approved bar and chain combinations.
	Both of the operator's hands must be used to operate the chainsaw.		Fuel and Oil Mixture
	Hot Surface		Chain Oil Fill

© 02/25 ECHO Incorporated

Symbol	Description	Symbol	Description
	Chain Brake Operation		Chain Oiler Adjustment
	Choke Control COLD START Position (Choke Closed) Choke Control RUN Position (Choke Open)		Purge Bulb
	Decompression Device	STOP STOP STOP	STOP / Momentary STOP Switch

Note: Not all symbols will appear on your unit.

© 02/25 ECHO Incorporated

Personal Condition and Safety Equipment

WARNING

Cancer and Reproductive Harm
www.P65Warnings.ca.gov

WARNING

The muffler or catalytic muffler and surrounding cover may become extremely hot. If unit is equipped with muffler, always keep clear of exhaust and muffler area, otherwise serious personal injury might occur.

WARNING

Users of this product risk injury to themselves and others if the unit is used improperly and/or safety precautions are not followed. Proper clothing and safety gear must be worn when operating unit.

Physical Condition

Your judgment and physical dexterity may not be good:

- If you are tired or sick
- If you are taking medication
- If you have taken alcohol or drugs

Operate unit only if you are physically and mentally well.

Eye Protection

WARNING

- **Eye protection that meets ANSI Z87.1 or CE requirements must be worn whenever you operate the unit.**
- **For additional safety, a full-face shield can be worn over safety glasses or goggles to provide protection from sharp branches or flying debris.**

© 02/25 ECHO Incorporated

Hand Protection

Wear sturdy, no-slip, rubber work gloves to improve your grip on the handles. Gloves also provide protection against cuts and scratches, cold environments, and reduce the transmission of machine vibration to your hands.

Hearing and Ear Protection

ECHO recommends wearing personal protective equipment whenever unit is used.

Breathing Protection

Operators who are sensitive to dust or other common airborne allergens may need to wear a dust mask to prevent inhaling these materials while operating unit. Dust masks can provide protection against dust, plant debris, and other plant matter such as pollen. Make sure the mask does not impair your vision, and replace the mask as needed to prevent air restrictions.

Proper Clothing

Wear snug-fitting, durable clothing:

- Pants should have long legs, shirts should have long sleeves.
- DO NOT WEAR SHORTS.
- DO NOT WEAR TIES, SCARVES, JEWELRY, or clothing with loose or hanging items that could become entangled in moving parts or surrounding growth.
- Keep clothing buttoned or zipped, and keep shirt tails tucked in.
- Wear sturdy work shoes with nonskid rubber soles.
- DO NOT WEAR OPEN TOED SHOES.
- DO NOT OPERATE UNIT WITH BARE FEET.

Keep long hair away from engine and air intake. Retain hair with cap or net.

Heavy protective clothing can increase operator fatigue, which may lead to heat stroke. Schedule heavy work for early morning or late afternoon hours when temperatures are cooler.

© 02/25 ECHO Incorporated

⚠ WARNING

The components of this machine generate an electromagnetic field during operation, which can interfere with some pacemakers. To reduce the risk of serious or fatal injury, persons with pacemakers should consult with their physician and the pacemaker manufacturer before operating this machine. In the absence of such information, ECHO does not recommend the use of this machine by anyone who has a pacemaker.

Extended Operation and Extreme Conditions

⚠ CAUTION

Prolonged exposure to cold and/or vibration can result in injury. Read and follow all safety and operation instructions to minimize risk of injury. Failure to follow instructions can result in painful wrist/hand/arm injuries.

It is believed that a condition called Raynaud's Phenomenon, which affects the fingers of certain individuals, may be brought about by exposure to vibration and cold. Exposure to vibration and cold may cause tingling and burning sensations, followed by loss of color and numbness in the fingers. The following precautions are strongly recommended, because the minimum exposure, which might trigger the ailment, is unknown.

- Keep your body warm, especially the head, neck, feet, ankles, hands, and wrists.
- Maintain good blood circulation by performing vigorous arm exercises during frequent work breaks, and also by not smoking.
- Limit the hours of operation. Try to fill each day with jobs where operating the unit or other hand-held power equipment is not required.
- If you experience discomfort, redness, and swelling of the fingers followed by whitening and loss of feeling, consult your physician before further exposing yourself to cold and vibration.

© 02/25 ECHO Incorporated

Repetitive Stress Injuries (RSI)

It is believed that overusing the muscles and tendons of the fingers, hands, arms, and shoulders may cause soreness, swelling, numbness, weakness, and extreme pain in those areas. Certain repetitive hand activities may put you at a high risk for developing a Repetitive Stress Injury (RSI). An extreme RSI condition is Carpal Tunnel Syndrome (CTS), which could occur when your wrist swells and squeezes a vital nerve that runs through the area. Some believe that prolonged exposure to vibration may contribute to CTS. CTS can cause severe pain for months or even years.

To reduce the risk of RSI/CTS, do the following:

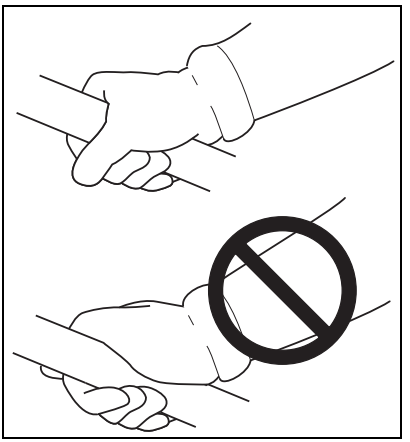

- Avoid using your wrist in a bent, extended, or twisted position. Instead try to maintain a straight wrist position. Also, when grasping, use your whole hand, not just the thumb and index finger.
- Take periodic breaks to minimize repetition and rest your hands.
- Reduce the speed and force with which you do the repetitive movement.
- Do exercises to strengthen the hand and arm muscles.
- Immediately stop using all power equipment and consult a doctor if you feel tingling, numbness, or pain in the fingers, hands, wrists, or arms. The sooner RSI/CTS is diagnosed, the more likely permanent nerve and muscle damage can be prevented.

⚠ DANGER

All overhead electrical conductors and communications wires can have electricity flow with high voltages. This unit is not insulated against electrical current. Never touch wires directly or indirectly, otherwise serious injury or death can result.

⚠ DANGER

Do not operate gas-powered products indoors or in inadequately ventilated areas. Engine exhaust contains poisonous emissions and can cause serious injury or death.

© 02/25 ECHO Incorporated

Rules for Safe Operation

WARNING

Kickback may occur when the nose or tip of the guide bar touches an object, or when the wood closes in and pinches the saw chain in the cut.

Tip contact in some cases may cause a lightning fast reverse reaction, kicking the guide bar up and back towards the operator. Pinching the saw chain along the top of the guide bar may push the guide bar rapidly back towards the operator. Either of these reactions may cause you to lose control of the saw which could result in serious personal injury.

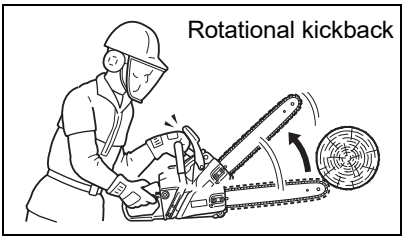

The optional Kick Guard™ device is not installed on the guide bar when you purchase your chainsaw. The optional Kick Guard can be used in a majority of cutting operations, and is especially recommended for beginners, homeowners, or chainsaw novices. Most cutting operations can be accomplished with the optional Kick Guard in place.

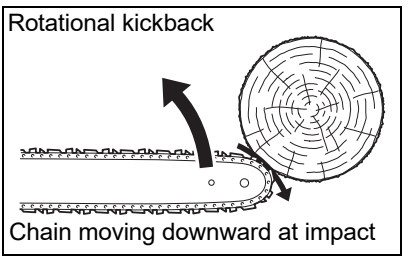

Do not rely exclusively upon the safety devices built into your saw. As a chainsaw user, you should take several steps to keep your cutting jobs free from accident or injury.

1. With a basic understanding of kickback, you can reduce or eliminate the element of surprise. Sudden surprise contributes to accidents.

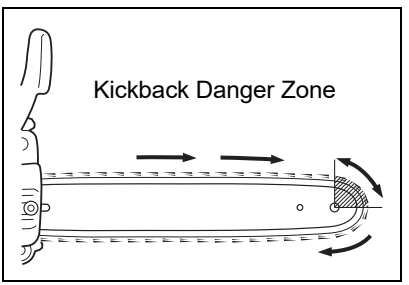

© 02/25 ECHO Incorporated

2. Keep a good firm grip on the saw with both hands, the right hand on the rear handle, and the left hand on the front handle, when the engine is running. Use a firm grip with thumbs and fingers encircling the chainsaw handles. A firm grip will help you reduce kickback and maintain control of the saw. Do not let go.
3. Make sure that the area in which you are cutting is free from obstructions. Do not let the nose of the guide bar contact a log, branch, or any other obstruction which could be hit while you are operating the saw.

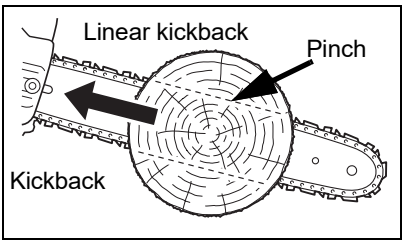

4. Cut at high engine speeds.
5. Do not overreach or cut above shoulder height.
6. Follow sharpening and maintenance instructions for the saw chain.
7. Only use replacement bars and chains specified in this manual.

Correct Use of Chain Brake

Chain Brake Operation

- Set the lever in the unlocked position before starting to cut.
- If the brake is tripped by kickback reaction, the chain will stop immediately. Release the throttle to avoid possible damage to the engine or clutch.

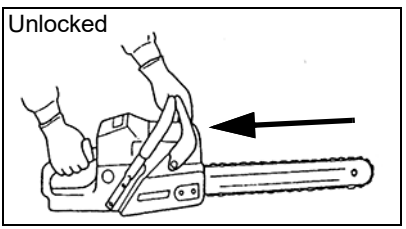

- Do not attempt to operate the engine with the brake locked.

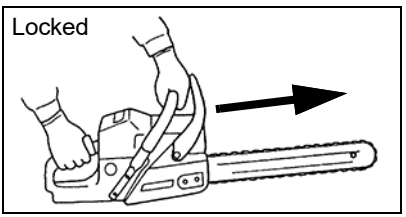

© 02/25 ECHO Incorporated

Testing the Brake

NOTICE

Do not allow the saw to tip forward in order to avoid damage to the chain.

- Start the engine on a solid level surface and run at a fast idle until warm.
- Hold the saw firmly by the handles and accelerate the engine to a fast idle.
- Slowly operate the chain brake lever while holding the saw firmly on the ground. When the brake lever trips, the chain should stop. Immediately release the throttle trigger.
- For practice, while cutting a small tree, push the lever forward to lock the brake.
- Confirm that the brake works properly before each use.
- If the chain brake is clogged with wood chips, function of the brake may deteriorate. Always keep the device clean.
- Do not increase engine RPM while the chain brake is locked.

⚠ WARNING

If the chain does not stop immediately, return the saw to your authorized dealer for repair. Do not use a bar and chain combination other than those specified in this manual. For your own safety, do not remove the chain brake system.

The installation of a chain brake may be mandatory by law or as stipulated by insurance regulations in your area of operation. You should inquire through local government offices, your employer or your local dealer to ensure that your chainsaw conforms to the required safety standard.

Chain brakes have been designed and tested to comply with international safety standards as follows:

USA: ANSI Standard B175.1 Safety Requirement for chainsaws

Canada: CSA Standard Z62.1, Z62.3

© 02/25 ECHO Incorporated

WARNING

ANSI Standard B175.1 and CSA Z62.1.3 stipulate that the brake shall stop the chain 0.12 seconds at an engine speed of 13,500 RPM. It is the responsibility of the owner/operator to ensure that the brake is serviced, adjusted and tested strictly in accordance with the instructions as detailed here in order to ensure that the brake performance is maintained in compliance with the Standards B175.1 and CSA Z62.1.3.

Automatic Chain Brake

Kickback produced from the tip of the guide bar will trip the automatic chain brake. To make sure that the automatic chain brake operates properly, follow these steps:

1. Stop the engine.

NOTICE

When checking the operation of the automatic chain brake, use a soft surface substance like wood to absorb the impact so the chain is not damaged.

2. Hold the saw with the guide bar approximately 35 cm (14 in.) above a wooden surface. Right hand should hold the rear handle, and left hand should hold the front handle.
3. Release the front handle and drop the end of the guide bar against the wooden surface.
4. The impact should lock the chain brake.

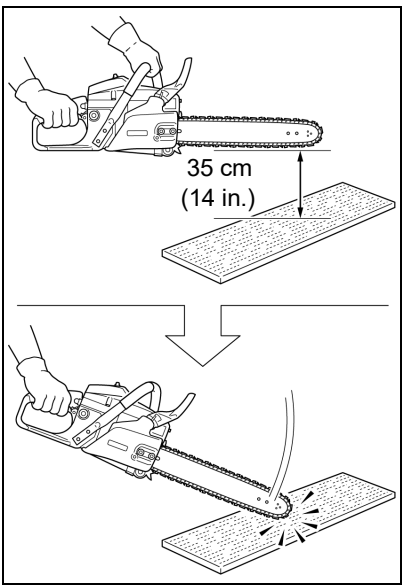

Other Safety Precautions

- Do not operate a chainsaw with one hand. Serious injury to the operator, helpers, bystanders, or any combination of these persons may result from one-handed operation. A chainsaw is intended for two-handed use.

© 02/25 ECHO Incorporated

- Do not operate a chainsaw when you are fatigued.
- Use safety footwear, snug-fitting clothing and protective gloves. Wear eye, hearing, and head protection devices.
- Use caution when handling fuel. Mix and pour fuel outdoors where there are no sparks and flames. Slowly remove the fuel cap only after stopping the engine and allowing the chainsaw to cool. Do not smoke while fueling or mixing fuel. Move the chainsaw at least 3 m (10 ft.) from the fueling point before starting the engine.
- Do not allow other persons to be near the chainsaw when starting or cutting with the chainsaw. Keep bystanders and animals out of the work area.
- Do not start cutting until you have a clear work area, secure footing, and a planned retreat path from the falling tree.
- Keep all parts of your body away from the saw chain when the engine is running.
- Before you start the engine, make sure that the saw chain is not contacting anything.
- Carry the chainsaw with the engine stopped, the guide bar and saw chain to the rear, and the muffler away from your body.
- Do not operate a chainsaw that is damaged, improperly adjusted, or not completely and securely assembled. Be sure that the saw chain stops moving when the throttle control trigger is released.
- Shut off the engine before setting the chainsaw down.
- Use extreme caution when cutting small size brush and saplings because slender material may catch the saw chain and be whipped toward you or pull you off balance.
- When cutting a limb that is under tension, be alert for spring-back so that you will not be struck when the tension in the wood fibers is released.
- Keep the handles dry, clean, and free of oil or fuel mixture.
- Operate the chainsaw only in well ventilated areas.
- Do not operate a chainsaw in a tree unless you have been specifically trained to do so.

© 02/25 ECHO Incorporated

- All chainsaw service, other than items listed in the operator's manual maintenance instructions, should be performed by competent service personnel. For example, if improper tools are used to remove the flywheel or if an improper tool is used to hold the flywheel in order to remove the clutch, structural damage to the flywheel could occur and could subsequently cause the flywheel to burst.
- When transporting your chainsaw, use the appropriate guide bar cover.
- A spark arrester muffler approved to SAE Standard J335 is standard on this chainsaw to reduce the possibility of forest fires. Do not operate the chainsaw with a loose or defective muffler. Do not remove the spark arrester screen.
- When using a chainsaw a fire extinguisher should be available.
- When felling, keep at least two tree lengths between yourself and your fellow workers.
- Follow instructions in your operator's manual for starting the chainsaw.
- Never adjust the guide bar or saw chain with the engine operating.
- When boring with the chainsaw, the initial cut should be introduced with the lower part of the nose (tip) until the hole is sufficiently large so as to introduce the entire nose (tip) of the guide bar. This technique should reduce the danger of kickback.
- Allow your chainsaw to cool before refueling, and do not smoke while refueling.

⚠ WARNING

Chainsaws shall be used in accordance with the operating instructions and safety precautions listed in the operator's manual(s). It shall be the responsibility of the owner to see that such instructions and precautions are given to every operator who uses the saw.

⚠ WARNING

- ***During operation, the muffler or catalytic muffler and surrounding cover become hot.***
- ***Never suspend the saw on a lanyard with the engine running.***
- ***Always use the saw from the right-hand side of your body – never from the left side.***

© 02/25 ECHO Incorporated

- ***Always wear proper safety clothing to protect your lower body from sharp saw chain and hot muffler.***
- ***Always keep exhaust area clear of flammable debris during transportation or when storing, otherwise serious property damage or personal injury may result.***

⚠ WARNING

Moving parts can amputate fingers or cause severe injuries. Keep hands, clothing and loose objects away from all openings.

- ***Always stop engine, disconnect spark plug, and make sure all moving parts have come to a complete stop before removing obstructions, clearing debris, or servicing unit.***
- ***Do not start or operate unit unless all guards and protective covers are properly assembled to unit.***
- ***Never reach into any opening while the engine is running. Moving parts may not be visible through openings.***

⚠ WARNING

Using improper replacement components or removing safety devices may result in serious or fatal injury.

Unit includes safety devices that reduce the likelihood of kickback:

- **Chain brake - brake actuated by kickback energy, not manual activation.**
- **Reduced-kickback guide bar - reduced nose radius guide bar.**
- **Front hand guard - a structural barrier between the front handle of a chainsaw and the guide bar.**

⚠ WARNING

Periodically check fuel system (fuel lines, vent, grommet, fuel tank, and fuel cap) for leaks especially if the unit is dropped. If damage or leaks are found, do not use unit, otherwise serious personal injury or property damage may occur. Have unit repaired by an authorized servicing dealer before using.

© 02/25 ECHO Incorporated

EMISSION CONTROL

EPA Emission Control Information

EMISSION CONTROL INFORMATION
ENGINE FAMILY: XEHXS.0214K0 DISPLACEMENT: 21.2 cc
EMISSION COMPLIANCE PERIOD: 300 Hours
THIS ENGINE MEETS U.S.EPA EXH/EVP EMISSION
REGULATIONS FOR MODEL YEAR XXXX REFER TO OWNER'S MANUAL
FOR MAINTENANCE SPECIFICATIONS AND ADJUSTMENTS.
YAMABIKO CORP.

The emission control system for the engine is EM (engine modification) and, if the second to last character of the Engine Family on the Emission Control Information label (see example) is “B”, “C”, “K”, or “T”, the emission control system is EM and TWC (3-way catalyst). The fuel tank/fuel line emission control system is EVAP (evaporative emissions).

An Emission Control Label is located on the engine. (This is an EXAMPLE ONLY, information on label varies by engine FAMILY).

Product Emission Durability (Emission Compliance Period)

The 50 or 300 hour emission compliance period is the time span selected by the manufacturer certifying the engine emissions output meets applicable emissions regulations, provided that approved maintenance procedures are followed as listed in the Maintenance Section of this manual.

© 02/25 ECHO Incorporated

DESCRIPTION

Locate the safety decal(s) or etching(s) on your unit. Make sure they are legible, and that you understand and follow the instructions. If any cannot be read, replacements can be ordered from your ECHO dealer. Images shown below are for example only. Those on your unit might appear slightly different.

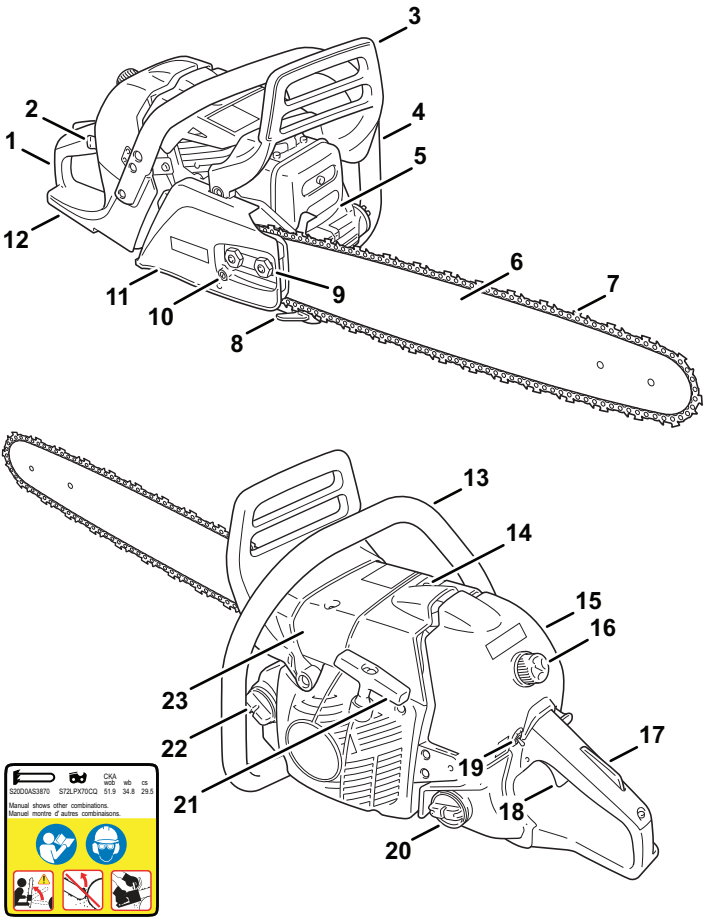

© 02/25 ECHO Incorporated

1. Rear handle (for right hand)
2. Choke control knob
3. Chain brake lever / front hand guard
4. Spark arrester muffler or spark arrester muffler with catalyst
5. Spiked bumper
6. Guide bar
7. Saw chain
8. Chain catcher
9. Sprocket guard nuts
10. Chain tension adjuster
11. Sprocket guard
12. Rear hand guard
13. Support handle (for left hand)
14. Decompression device
15. Air cleaner cover
16. Air cleaner cover knob
17. Throttle trigger lockout
18. Throttle trigger
19. Stop switch
20. Fuel tank cap
21. Starter handle
22. Cylinder cover
23. Oil tank cap

Chainsaw Terms

- Fast Idle -Throttle setting that causes engine to operate at a faster speed for easier starting.
- Throttle Latch - Device that sets idle speed to fast idle when choke control is operated.
- Chain Brake - Stops the saw chain.
- Drive Sprocket - Drives the saw chain.
- Clutch - Turns the drive sprocket when the engine RPM is fast enough to provide the power needed for cutting.

© 02/25 ECHO Incorporated

CONTENTS

The ECHO product you purchased has been factory pre-assembled for your convenience. Due to packaging restrictions, some assembly may be necessary.

After opening the carton, check for damage. Immediately notify your retailer or ECHO Dealer of damaged or missing parts. Use the contents list to check for missing parts.

1	Power head
1	Operator's manual
1	Warranty statement
1	Guide bar
1	Guide bar cover
1	Saw chain

ASSEMBLY

Preparation for Use

WARNING

Saw chain is sharp! Always wear gloves when handling assembly, otherwise serious personal injury may result.

Note: The machine may be delivered with guide bar, and saw chain separated. Install guide bar, optional Kick Guard™, and saw chain as follows.

Instructions to Install Optional Kick Guard to Bar

Tools needed: Two, 11 mm (7/16 in.) wrenches.

1. Install bolt (A) in rear hole (B) of Kick Guard and through front hole (C) in guide bar.
2. Align dimple (D) in Kick Guard with recess (E) in guide bar.
3. Securely tighten nut (F) and bolt (A).

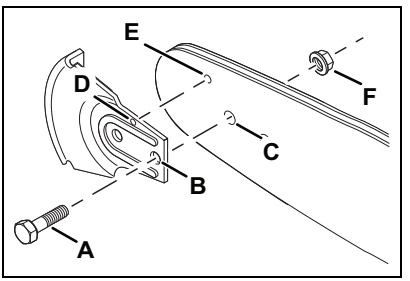

© 02/25 ECHO Incorporated

Guide Bar and Saw Chain Installation and Removal

WARNING

Improper sprocket guard assembly can result in serious injury, and will cause severe saw damage if unit is started. Never start or operate saw if brake band is not in place on clutch drum. Always check chain brake operation after replacing sprocket guard. Do not use saw if chain brake does not function properly.

1. Remove air filter cover and disconnect spark plug lead.
2. Unlock chain brake (A).
3. Remove sprocket guard nuts (B) and remove sprocket guard (C).

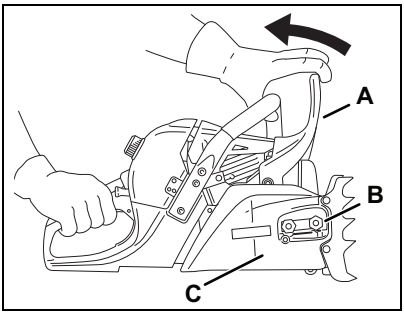

4. Remove guide bar (D) and saw chain (E) as necessary.
5. Mount guide bar (D) on studs (F) and slide toward clutch drum sprocket (G) to make saw chain (E) installation easier. Install saw chain around clutch drum sprocket and guide bar as shown, with cutters on top of guide bar facing forward.

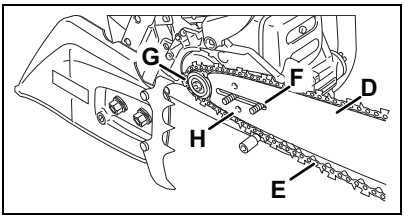

6. Install sprocket guard (C) over guide bar studs (F). Make sure chain tension adjuster pin fits into guide bar adjuster hole (H), and the brake band is positioned around the clutch drum. Tighten sprocket guard nuts (B) finger tight.
7. Adjust saw chain tension, as instructed in Adjusting Chain Tension.

© 02/25 ECHO Incorporated

Adjusting Chain Tension

NOTICE

Always loosen sprocket guard nuts before turning the chain tension adjuster, otherwise the sprocket guard and tensioner will be damaged.

1. Remove air cleaner cover and disconnect spark plug lead.
2. Unlock chain brake and loosen sprocket guard nuts (A).

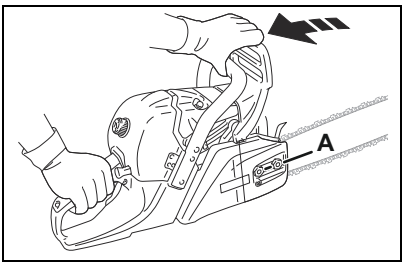

3. Hold the bar nose up, and turn the adjuster toward (+) until chain contacts underside of the bar.

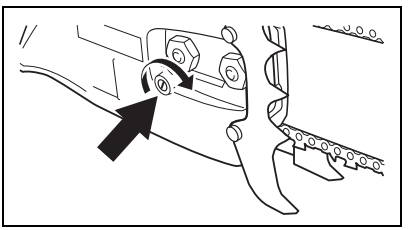

NOTICE

Tighten guide bar nuts to 20-23 N•m (175-200 lbf•in). Do not over-tighten nuts or damage to saw may result.

4. Tighten nuts with the bar nose held up.

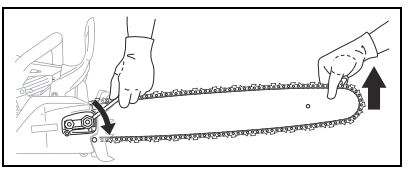

© 02/25 ECHO Incorporated

5. Pull the chain around the bar by hand. Loosen the adjustment if you feel tight spots.
6. Assemble components in reverse order.
7. Keep chain properly tensioned at all times.

Note: All chains require frequent adjustments.

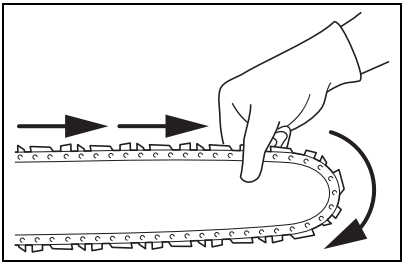

Winter Operation

The air shutter is used to prevent carburetor trouble in winter.

1. Remove air cleaner cover (A).
2. Pull air shutter (B) to COLD position.

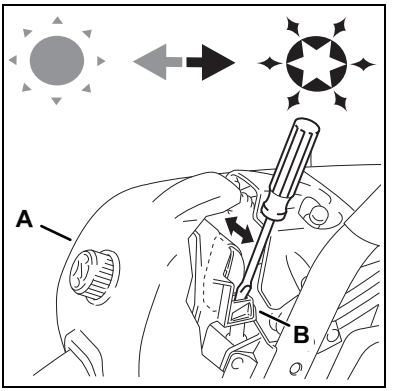

OPERATION

WARNING

Moving parts can amputate fingers or cause severe injuries. Keep hands, clothing and loose objects away from all openings. Always stop engine, disconnect spark plug, and make sure all moving parts have come to a complete stop before removing obstructions, clearing debris, or servicing unit.

WARNING

Engine exhaust is hot, and contains Carbon Monoxide (CO), a poison gas. Breathing CO can cause unconsciousness, serious injury, or death. Exhaust can cause serious burns. Always position unit so that exhaust is directed away from your face and body.

© 02/25 ECHO Incorporated

WARNING

Operation of this equipment may create sparks that can start fires around dry vegetation. This unit is equipped with a spark arrester to prevent discharge of hot particles from the engine. Metal cutters can also create sparks if the cutter strikes rocks, metal, or other hard objects. Contact local fire authorities for laws or regulations regarding fire prevention requirements.

Fuel

WARNING

Diesel fuels and alternative fuels, such as E-15 (15% ethanol), E-85 (85% ethanol) or any fuels not meeting ECHO requirements are NOT approved for use in ECHO two-stroke gasoline engines. Use of diesel or alternative fuels can cause performance problems, loss of power, overheating, fuel vapor lock, and unintended machine operation, including, but not limited to, improper clutch engagement. Diesel or alternative fuels can also cause premature deterioration of fuel lines, gaskets, carburetors and other engine components.

Fuel Requirements

Gasoline - Use fresh (purchased within the last 30 days from the pump) 89 Octane [R+M/2] (mid grade or higher) gasoline known to be good quality. Gasoline may contain up to 10% Ethanol (grain alcohol) or 15% MTBE (methyl tertiary-butyl ether). Gasoline containing methanol (wood alcohol) is **NOT** approved. Use of ECHO branded fuel is recommended to extend engine life in all air-cooled two-stroke and two/four stroke hybrid engines.

Two-Stroke Oil - A two-stroke engine oil, such as ECHO branded two-stroke oils, meeting ISO-L-EGD (ISO/CD 13738) and J.A.S.O. FD Standards must be used. ECHO branded two-stroke oils meet these standards. Engine problems due to inadequate lubrication caused by failure to use an ISO-L-EGD (ISO/CD 13738) and J.A.S.O. M345-FD certified oil will void the two-stroke engine warranty.

© 02/25 ECHO Incorporated

WARNING

Two-stroke engine oil contains petroleum distillates and other additives that may be harmful if swallowed. Heated oil can release vapors that can cause flash fire, or ignite with explosive force. Read and follow the oil manufacturer's instructions, and observe all safety warnings and precautions for handling flammable liquids. For more detailed safety and first aid information, visit www.echo-usa.com for a copy of the Material Safety Data Sheet.

- **KEEP OUT OF REACH OF CHILDREN.**
- **If swallowed, do not induce vomiting. CALL PHYSICIAN OR A POISON CONTROL CENTER IMMEDIATELY.**
- **WEAR SAFETY GLASSES when mixing or handling.**
- **AVOID repeated or prolonged skin contact.**
- **AVOID inhaling oil mists or vapors.**

NOTICE

ECHO branded two-stroke oils may be mixed at 50:1 ratio for application in all ECHO engines sold in the past regardless of ratio specified in those manuals.

Handling Fuel

DANGER

Fuel is flammable. Use extreme care when mixing, storing or handling, or serious personal injury will result.

- ***Use an approved fuel container. Mark fuel containers as containing two-stroke mixture fuel.***
- ***DO NOT smoke near fuel.***
- ***DO NOT allow flames or sparks near fuel.***
- ***Fuel tanks/cans may be under pressure. Always loosen fuel caps slowly allowing pressure to equalize.***
- ***NEVER refuel a unit when the engine is HOT or RUNNING!***
- ***DO NOT fill fuel tanks indoors. ALWAYS fill fuel tanks outdoors over bare ground.***
- ***DO NOT overfill fuel tank. Wipe up spills immediately.***
- ***Securely tighten fuel tank cap and close fuel container after refueling.***

© 02/25 ECHO Incorporated

- ***Inspect for fuel leakage. If fuel leakage is found, do not start or operate unit until leakage is repaired.***
- ***Use caution when handling fuel. Mix and pour fuel outdoors where there are no sparks and flames. Slowly remove the fuel cap only after stopping the engine and allowing the unit to cool. Do not smoke while fueling or mixing fuel. Move the unit at least 3 m (10 ft.) from the fueling point before starting the engine.***

DANGER

Gasoline vapor is heavier than air, and can travel along the ground to nearby sources of ignition such as electrical motors, pilot lights, and hot or running engines. Vapors ignited by an ignition source can flash back to the fuel container, resulting in an explosion, fire, serious or fatal injuries, and extensive property damage.

Mixing Instructions

NOTICE

Stored fuel ages. Do not mix more fuel than you expect to use in 30 days or 90 days when a fuel stabilizer is added.

1. Fill an approved fuel container with half of the required amount of gasoline.
2. Add the proper amount of two-stroke oil to gasoline.
3. Close container and shake to mix oil with gasoline.
4. Add remaining gasoline, close fuel container, and remix.

Fuel to Oil Mix – 50:1 Ratio			
US		Metric	
Gas	Oil	Gas	Oil
gal.	fl.oz.	L	cc
1	2.6	5	100
2	5.2	10	200
5	13	25	500

NOTICE

Spilled fuel is a leading cause of hydrocarbon emissions. Some locations may require the use of automatic fuel shut-off containers to reduce fuel spillage.

© 02/25 ECHO Incorporated

Storage - Fuel storage laws vary by locality. Contact your local government for the laws affecting your area. As a precaution, store fuel in an approved, airtight container. Store in a well-ventilated, unoccupied building, away from sparks and flames.

- Empty the fuel tank prior to storing the unit. Return unused fuel to an approved fuel storage container.

NOTICE

Stored two-stroke fuel can separate. ALWAYS shake fuel container thoroughly before each use.

NOTICE

Used oil and gasoline, and soiled towels are hazardous waste materials. Disposal laws vary by locality.

Chain Lubricant

Proper lubrication of the chain while in operation reduces friction between the chain and the guide bar to a minimum and assures a longer service life.

Note: Cap indication - Fuel and oil tanks are indicated by the following illustrations

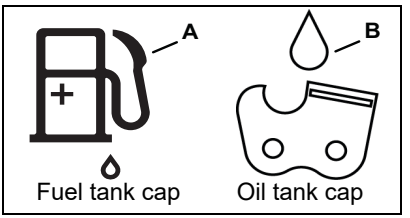

- Use bar and chain oil of high quality for this purpose.
- Do not use used or reclaimed oil to avoid various oiler problems.
- Use high quality bar and chain oil.
- Use bar and chain oil of the following grades:
  - SAE No. 30 in summer.
  - SAE No. 10 in winter or when cutting resinous trees.
- When refueling, also refill chain oil.

© 02/25 ECHO Incorporated

Starting Cold Engine

Make sure the bar and chain are free from any obstruction when starting the chainsaw.

1. Move chain brake lever (A) fully forward to the lock position
2. Fill the fuel tank with fuel mixture. Do not over fill.
3. Fill the chain oil tank with lubricant. Do not over fill.

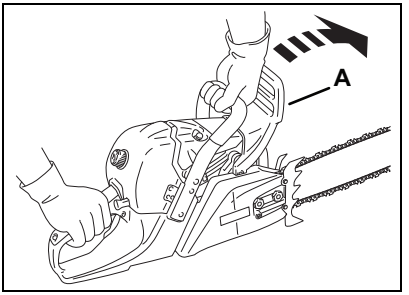

4. Move stop switch (B) to RUN position.
5. Press decompression device (C).

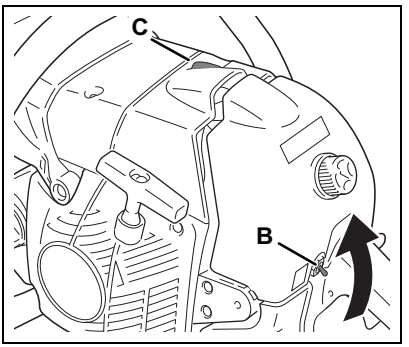

6. Pull choke control knob (D) all the way out (CLOSED choke position).

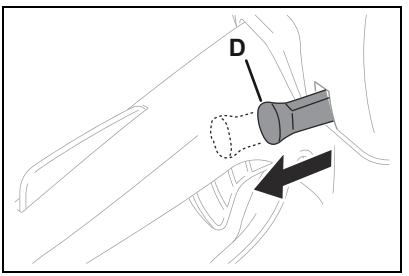

WARNING

- ***After choke control knob is pulled and then knob is returned to original position, throttle remains slightly open (fast idle latch condition).***

© 02/25 ECHO Incorporated

- ***The chain will attempt to move when engine is started with fast idle throttle latch engaged.***
- ***Do not start engine before chain brake is locked.***

Note: Do not squeeze throttle trigger until after chainsaw starts.

7. Securely hold the chainsaw and pull starter handle (E) several times until first starting sound.

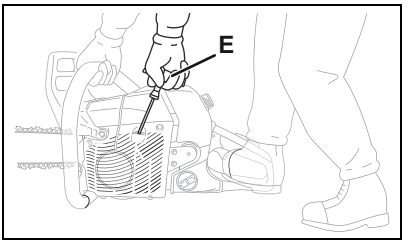

Note: Do not pull starter rope out to the maximum possible position. Do not allow starter handle to snap back against the casing. If engine does not start after five pulls, repeat instructions.

8. Push choke control knob all the way in.
9. Press the decompression device and pull starter handle again to start the engine.
10. When engine starts, immediately squeeze and release throttle trigger for disengaging throttle latch and returning engine to idle, and pull front hand guard towards the operator immediately (chain brake unlocked position).

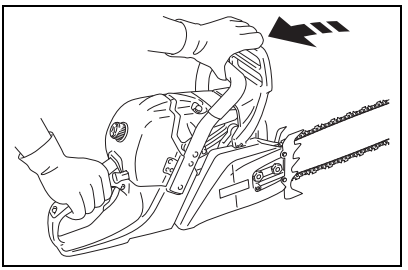

⚠ CAUTION

- ***After starting the engine, immediately squeeze and then release throttle trigger to release fast idle throttle latch, otherwise severe brake damage may occur.***
- ***Never use fast idle throttle latch for cutting.***
- ***Use the fast idle throttle latch only in starting.***

NOTICE

Do not increase engine speed while chain brake is locked. Severe brake damage will result.

© 02/25 ECHO Incorporated

Starting Warm Engine

WARNING

Make sure the bar and chain are free from any obstruction when starting the chainsaw.

1. Move chain brake lever (A) fully forward to lock chain brake before starting.
2. Confirm there is fuel and chain oil in the tanks.

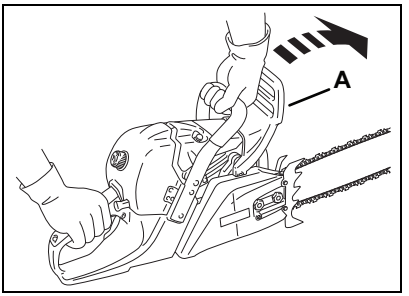

3. Move stop switch (B) to RUN position.
4. Press decompression device (C).

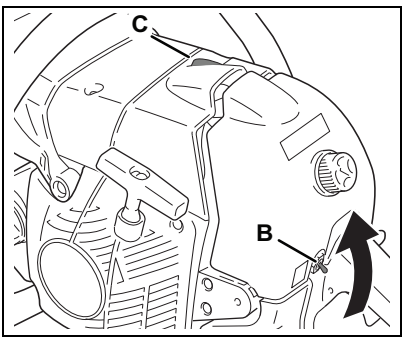

5. Securely hold the chainsaw as shown and pull starter handle (E).
6. Choke may be used if necessary, but after first firing sound, pull throttle trigger to release choke.

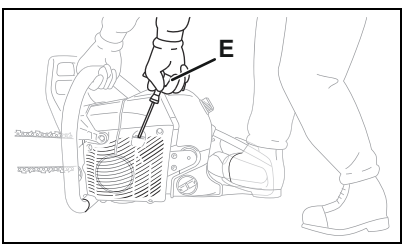

© 02/25 ECHO Incorporated

7. After starting the engine, pull front hand guard towards the operator immediately (chain brake unlocked position).

Note: If engine does not start after five pulls, use cold start procedure.

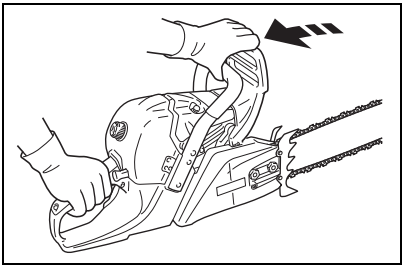

NOTICE

Do not increase engine speed while chain brake is locked. Severe brake damage will result.

Running

⚠ WARNING

The saw chain should not move at idle, otherwise serious personal injury may result.

Note: If saw chain moves adjust carburetor according to Carburetor Adjustment instructions in this manual, or see your dealer.

1. After engine starts, allow it to return to idle and warm up before using.
2. Move chain brake lever (A) fully rearward to unlock chain brake.
3. Squeeze throttle trigger lock and throttle trigger gradually to increase engine speed.
4. The chain starts running when the engine reaches approximately 4,000 RPM.

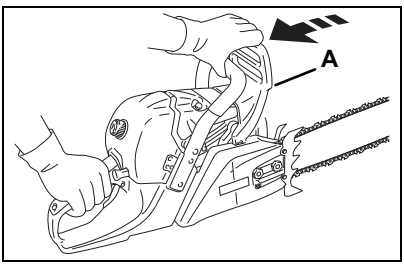

5. Confirm proper acceleration and lubrication of chain and bar.
6. Do not run the engine at high speed unnecessarily.
7. Be sure that saw chain stops moving when throttle trigger is released.

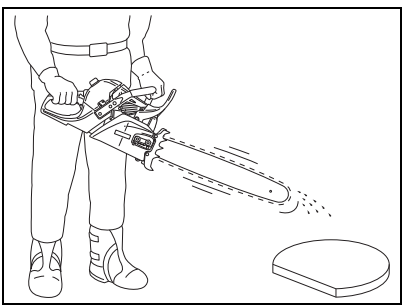

© 02/25 ECHO Incorporated

Stopping

1. Release throttle trigger (A) and move stop switch (B) down to STOP position.

Note: If engine does not stop, pull choke control knob out fully to stop engine.

Note: Return the unit to your authorized dealer to check and repair stop switch before starting the engine again.

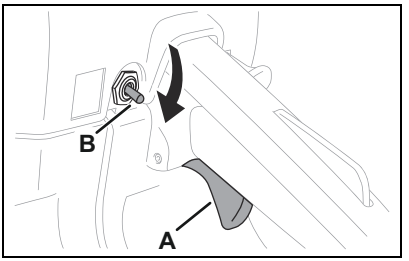

Checking Chain Tension

CAUTION

Do not operate with a loose chain.

Chain tension should be checked frequently during work and corrected as necessary.

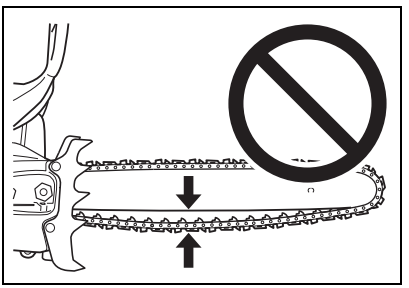

Chain Lubrication Test

Hold the chain just above a dry surface and open the throttle to half speed for 30 seconds.

A thin line of oil should be seen on the dry surface.

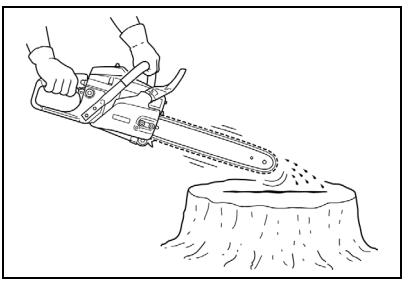

© 02/25 ECHO Incorporated

Cutting Instructions

General

WARNING

- ***This chainsaw is designed for cutting wood. Do not cut metal, plastic or any non-wood material.***
- ***Wear suitable hearing protection such as earmuffs or earplugs to protect against loud noises.***

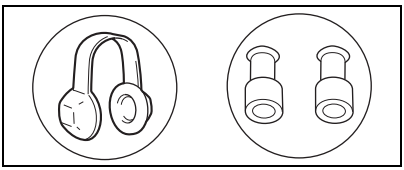

- ***Do not let the tip of the bar touch anything while the engine is running. At cutting speed the chain is moving at a high rate of speed. Should the tip contact a limb or log while the chain is moving, the tip will be pushed upward with considerable force. This is known as kickback.***

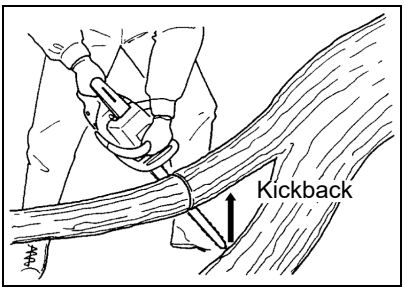

NOTICE

Some tree sap and resins are corrosive. Thoroughly clean the guide bar, sprocket guard, and sprocket areas after each use, then coat metal parts with oil.

Do not run a chainsaw not under cutting load at wide open throttle longer than five seconds or engine damage can occur.

Keep chain properly tensioned during operation to prevent the chain from jumping out of the guide bar rail slot and damaging metal engine parts.

In all circumstances the operation of the chainsaw is a one-person job. It is difficult at times to take care for your own safety, so do not assume the responsibility for a helper as well.

© 02/25 ECHO Incorporated

The accepted way to hold the saw is to stand to the left of the saw with your left hand on the front handle and your right hand on the rear handle so you can operate the throttle trigger with your right index finger. Before attempting to fell a tree, cut some small logs or limbs. Become thoroughly familiar with the controls and the responses of the saw.

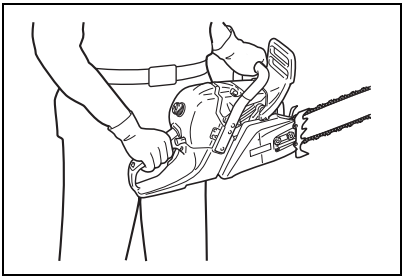

1. Start the engine.
2. Squeeze the trigger to open the throttle wide open and start the cut.

If the chain is properly sharpened, the cutting should be relatively effortless. It is not necessary to press down hard to make the saw cut. Pushing the saw too hard will slow the engine and cutting will actually be more difficult.

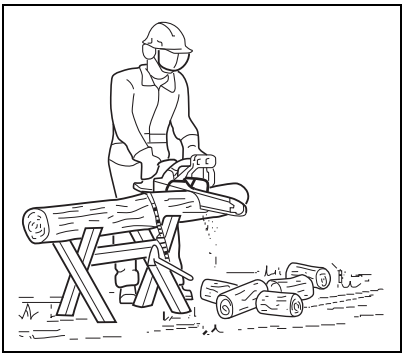

Felling the Tree

WARNING

A falling tree can cause serious personal injury, or seriously damage anything it might hit. Always plan a retreat path before felling a tree.

Before cutting, clear the area around the tree. You will need good footing while working and you should be able to work the saw without hitting any obstacles. Next, select a path of retreat. When the tree begins to fall you should retreat away from the direction of fall at a 45° angle and at least 3 m (10 ft.) from the trunk to avoid the trunk kicking back over the stump.

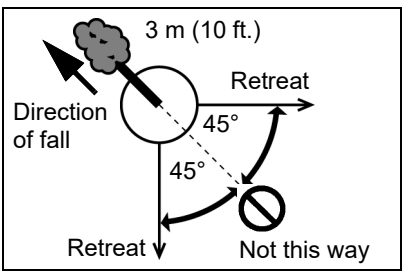

© 02/25 ECHO Incorporated

1. Cut a notch about one-third of the way into the tree. This notch will indicate the direction in which the tree will fall.
2. Make a felling cut on the opposite side of the notch, about 5 cm (2 in.) above it.

   Do not cut through to the notch with the felling cut; the remaining wood will act as a hinge and guide the tree as it falls.

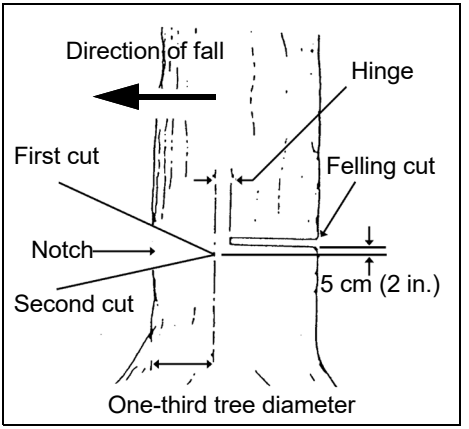

3. When the tree starts to fall, stop the engine, place the saw on the ground, and retreat.

To fell trees with a diameter exceeding twice the bar length:

1. Start the notching cuts from one side and saw through to the other.
2. Start the back-cut on one side of the tree, pivot the saw through to form the desired hinge on that side. Remove the saw for the final cut.
3. Insert the saw into the first cut carefully to avoid kickback.

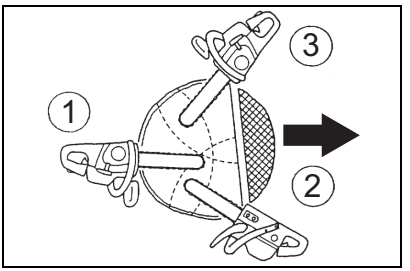

4. Make the final cut by pulling the saw forward to the hinge.

© 02/25 ECHO Incorporated

Bucking

Bucking is the sawing of a log or fallen tree into smaller pieces. There are a few basic rules which apply to all bucking operations.

- Keep both hands on the handles at all times.
- Support logs if possible.
- When cutting on a slope or hillside, always stand uphill.

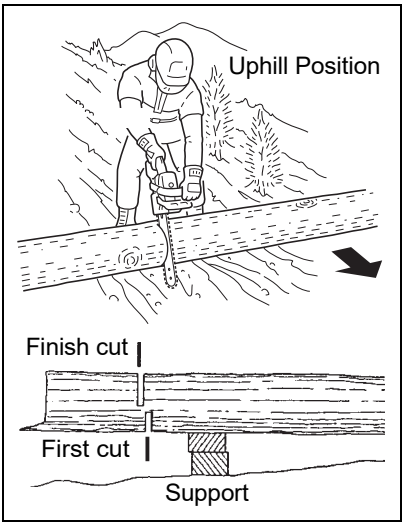

Keep in mind that the wood is heavy and that it will bend and pinch the saw if improperly supported. The trunk will weaken at the point where you make the cut unless the tree is lying on perfectly flat ground or supported as shown. If you make the cut with the tree on the ground, don't let the saw's chain dig into the earth; it is harmful for the saw, and you stand a good chance of being struck by flying debris.

Limbing

Limbing a fallen tree is much the same as bucking. Never stand on the tree that you are limbing. When limbing, caution is the word. Be careful of the tip touching other limbs. Always use both hands.

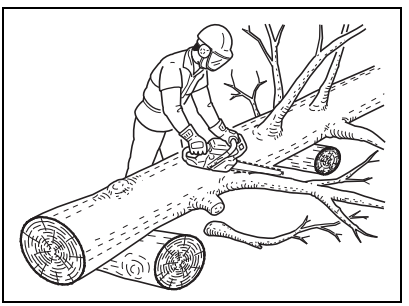

Do not cut with the saw overhead or aligned vertically with your body. If the saw should kick back, you may not have enough control to prevent possible injury.

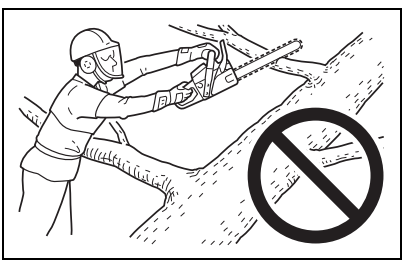

To cut the trunk, use the bucking and two-cut sequence shown. The first cut should be no deeper than one-third the trunk diameter.

© 02/25 ECHO Incorporated

Guide Bar and Chain Combination

The following combinations are recommended for model CS-
CS-590.

Guide Bar		Saw Chain		
Length mm (in.)	ECHO Part No. Low-kickback	Pitch (in.)	Type	Links
406 (16)	16D0PS3860	(3/8)	72LPX60CQ	60
457 (18)	18D0AS3864 18D0PS3866		72LPX64CQ 72LPX66CQ	64 66
508 (20)	20D0AS3870 20D0PS3870		72LPX70CQ	70
610 (24)	24D0AS3884 24D0PS3881		72LPX84CQ 72LPX81CQ	84 81
686 (27)	27D0PS3893		72LPX93CQ	93

WARNING

Use of replacement saw chain and/or guide bar other than that specified, or operation without the optional Kick Guard™ in place, may cause severe kickback resulting in serious injury.

NOTICE

Chain and guide bar gauge size must be identical. Use bar and chain combinations shown in table above.

Kick Guard™

(Optional)

To purchase an optional Kick Guard™ contact your dealer. For the name of the dealer nearest you, for ECHO, call: 1-800-432-ECHO (3246) or on the web at www.echo-usa.com. For Shindaiwa, call: 1-877-986-7783 or on the web at www.shindaiwa-usa.com.

© 02/25 ECHO Incorporated

Guide Bar

(Low-kickback)

Replacement guide bars.

The following guide bars may be considered to have equivalent kickback energy:

- Sprocket nose guide bars of the same length and nose radius, same pitch and having the same number of teeth.
- Hard nose guide bars of the same length and nose radius as a sprocket nose bar.

MAINTENANCE

WARNING

Moving parts can amputate fingers or cause severe injuries. Keep hands, clothing and loose objects away from all openings. Always stop unit, disconnect spark plug or remove battery, and make sure all moving parts have come to a complete stop before removing obstructions, clearing debris, or servicing unit. Allow the unit to cool before performing maintenance or adjustments. Wear gloves to protect hands from sharp edges and hot surfaces.

WARNING

Operating a poorly maintained unit can result in serious injuries to operator or bystanders. Always follow all maintenance instructions as written, otherwise serious personal injury can result.

Your unit is designed to provide many hours of trouble-free service. Regular scheduled maintenance will help your unit achieve that goal. If you are unsure or are not equipped with the necessary tools, we recommend that you take your unit to a Servicing Dealer for maintenance. To help you decide whether you want to do it yourself or have the dealer do it, each maintenance task has been graded. If the task is not listed, see your Dealer for repairs.

NOTICE

The use of emission control components other than those specifically designed for this unit is a violation of federal law.

© 02/25 ECHO Incorporated

Skill Levels

Level 1 = Easy to do. Common tools may be required.

Level 2 = Moderate difficulty. Some specialized tools may be required.

Level 3 = See your dealer.

Click HERE or go to http://www.echo-usa.com/products/maintenance-kit

or

https://www.shindaiwa-usa.com/you-can.aspx

Maintenance Intervals

WARNING

Units equipped with a momentary STOP switch automatically return to RUN position. Engine can start unintentionally. Always remove spark plug lead from spark plug before assembling or performing maintenance procedures, otherwise serious personal injury can result.

COMPONENT OR SYSTEM	MAINTENANCE PROCEDURE	REQUIRED SKILL LEVEL
Daily or Before Use		
Air Filter	Inspect / clean *	**1**
Automatic Oiler	Inspect / adjust	**1**
Oil Filter	Inspect	**1**
Fuel System	Inspect	**1**
Guide Bar and Sprocket Nose	Inspect / clean *	**1**
Saw Chain	Inspect / sharpen / replace / tensioning *	**2**
Sprocket	Inspect / replace *	**2**
Cooling System	Inspect / clean	**2**
Recoil Starter Rope	Inspect / clean *	**1**
Screws / Nuts / Bolts	Inspect / tighten / replace *	**1**
Every Refuel		
Fuel System	Inspect	**1**

© 02/25 ECHO Incorporated

COMPONENT OR SYSTEM	MAINTENANCE PROCEDURE	REQUIRED SKILL LEVEL
Guide Bar and Sprocket Nose	Inspect	**1**
3 Months		
Air Filter	Replace *	**1**
Oil Filter	Inspect / replace *	**1**
Fuel Filter	Inspect *	**1**
Fuel Cap Gasket	Inspect *	**1**
Spark Plug	Inspect / clean / replace *	**1**
Muffler Spark Arrester	Inspect / clean / replace *	**2**
Cylinder Exhaust Port	Inspect / clean / de-carbon	**2**
Yearly		
Fuel Filter	Inspect / replace *	**1**
Fuel Cap Gasket	Replace *	**1**

Note: Time intervals shown are maximum. Actual use and your experience will determine the frequency of required maintenance.

* Replacement is recommended based on the finding of damage or wear during inspection

Air Filter

1. Check before every use.
2. Close the choke.
3. Remove air cleaner cover (A) and air filter (B).
4. Lightly brush dust off air filter, or clean with compressed air, or replace the air filter.
5. Install air filter and cover.

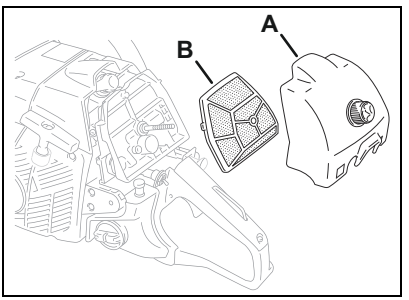

© 02/25 ECHO Incorporated

Spark Plug

- Check periodically.
- The standard spark gap is 0.65 mm (0.026 in.).
- Fastening torque: 15-17 N•m (130-150 lbf•in).

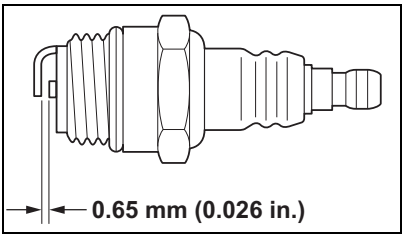

1. Remove air cleaner cover and remove spark plug.
2. Correct the spark gap if it is wider or narrower than the standard gap.

Check Fuel System

- Check before every use.
- After refueling, make sure fuel does not leak from around fuel pipe, fuel grommet or fuel tank cap.
- In case of fuel leakage there is a danger of fire. Stop using the machine immediately and request your dealer to inspect or replace.

Fuel Filter

- Check periodically.
- Do not allow dust to enter fuel tank.
- A clogged filter (A) will cause difficulty in starting engine or abnormalities in engine performance.

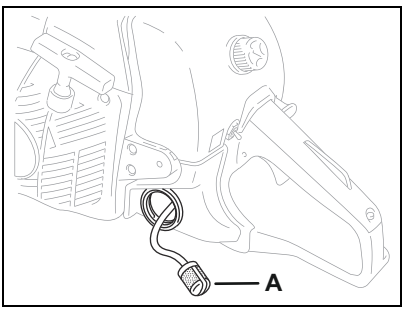

1. Pull filter out through gas port, and inspect filter.

NOTICE

Do not damage fuel line while removing fuel filter from tank.

2. When the filter is dirty, replace it.

© 02/25 ECHO Incorporated

3. Do not remove the wire coil clamp to remove the fuel filter. Pinch the fuel filter with the fingers on one hand and the fuel line with the other hand. Pull and twist slightly to separate.
4. Install the new filter with the reverse action.
5. When the inside of the fuel tank is dirty, rinse the tank out with gasoline to clean it.

Note: Federal EPA regulations require all model year 2012 and later gasoline powered engines produced for sale in the United States to be equipped with a special low permeation fuel supply hose between the carburetor and fuel tank. When servicing model year 2012 and later equipment, only fuel supply hoses certified by EPA can be used to replace the original equipment supply hose. Fines of up to $37,500 may be imposed for using a non-certified replacement part.

Oil Filter

- Check periodically.
- Do not allow dust to enter into oil tank.
- A clogged oil filter (A) will affect the normal lubricating system.

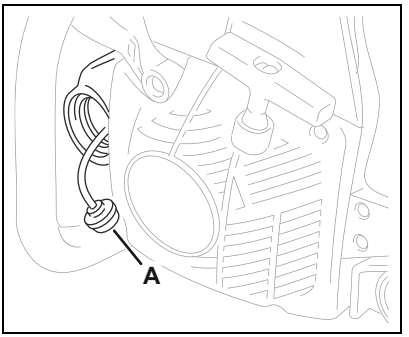

1. Pull filter out through oil port, and inspect filter.
2. If the filter is dirty, wash it in gasoline or replace it as follows:
3. Do not remove the wire coil clamp to remove the filter. Pinch the filter with the fingers on one hand and the line with the other hand. Pull and twist slightly to separate.
4. Install the new filter with the reverse action.
5. When the inside of the tank gets dirty, rinse the tank out with gasoline to clean it.

© 02/25 ECHO Incorporated

Automatic Oiler

- The discharge volume of the automatic oiler is adjusted to approximately 4 mL/min at 7,000 RPM, prior to shipment from factory.
- Always check oil discharge when in use.
- Turn adjusting screw (A) counterclockwise to increase oil volume, clockwise to decrease oil volume. When the screws touches the stopper and stops, this position indicates maximum discharge volume.
- Do not turn the adjusting screw beyond the maximum or minimum limit of volume adjustment.

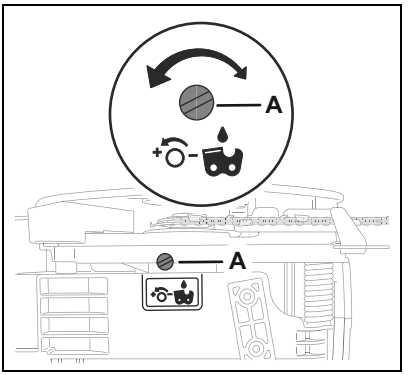

Guide Bar

1. Clean before using.
2. Clean the groove of the guide bar (A) with a small screwdriver.
3. Clean oil holes (B) with a wire.
4. Invert guide bar periodically.
5. Clean the guide bar mount area before installing the guide bar.

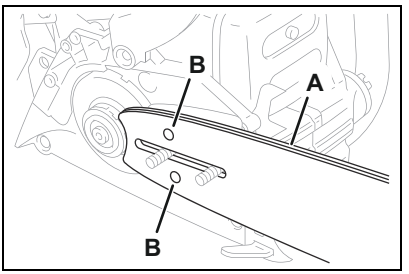

Sprocket

- A damaged sprocket will cause premature damage or wear of saw chain.
- When the sprocket has worn 0.5 mm (0.020 in.) or more, replace it.
- Check sprocket when you install new chain. Replace it if worn.

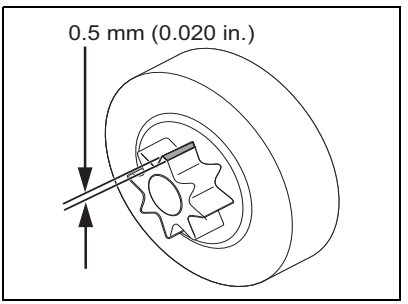

© 02/25 ECHO Incorporated

NOTICE

Some tree sap and resins are corrosive. Thoroughly wash the guide bar and sprocket areas after each use, then coat metal parts with oil.

Cooling System Cleaning

- Check periodically.
- Clogged fins will result in poor engine cooling.

1. Remove air cleaner cover, and cylinder cover.
2. Use compressed air or wooden tool to remove dirt and dust from between fins to let cooling air pass easily.

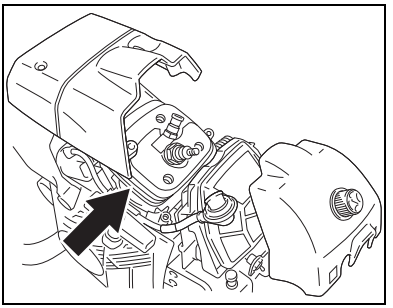

Spark Arrester Muffler

- The spark arrester muffler controls the exhaust noise and prevents hot, glowing particles of carbon from leaving the muffler.
- Make sure the spark arrester screen is in good repair and properly seated in the muffler.
- Certain internal combustion engines operated on forest, brush, and/or grass-covered areas in the states of Washington, Oregon, Idaho, California, Minnesota, New Jersey and Maine, are required to be equipped with a spark arrester.

This requirement also applies to all U.S. Forest Service lands. In some of these areas, the spark arrester system must be certified per USDA Forest Service Regulation SAE J335.

Check with your local or state authorities for specific regulations in your area. Failure to follow these requirements is a violation of the law.

© 02/25 ECHO Incorporated

Spark Arrester Screen

NOTICE

Carbon deposits in muffler will cause drop in engine output and overheating. Spark arrester screen must be checked periodically.

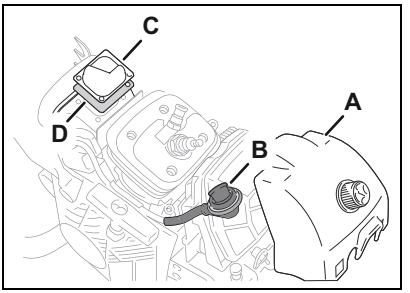

1. Remove air cleaner cover (A) and remove spark plug lead (B).
2. Remove spark arrester cover (C) and screen (D) from muffler body.
3. Clean carbon deposits from muffler components.
4. Replace screen if it is cracked, or has holes burned through.
5. Assemble components in reverse order.

Note: When cleaning carbon deposit, be careful not to damage the catalytic element inside muffler.

Carburetor Adjustment

Every unit is run at the factory and the carburetor is set in compliance with emission regulations. In addition, the carburetor is equipped with “**H**” (High Speed) and “**L**” (Low Speed) needle adjustment limiters that prevent settings outside acceptable limits.

Engine Break-In

New engines must be operated a minimum duration of two tanks of fuel break-in before carburetor adjustments can be made. During the break-in period your engine performance will increase and exhaust emissions will stabilize. Idle speed can be adjusted as required.

High Altitude Operation

This engine has been factory adjusted to maintain satisfactory starting and durability performance up to 335 m (1,100 ft.) above sea level (ASL) (96.0 kPa). To maintain proper engine operation above 335 m (1,100 ft.) ASL the carburetor may need to be adjusted by an authorized service dealer.

NOTICE

If the engine is adjusted for operation above 335 m (1,100 ft.) ASL, the carburetor must be readjusted when operating the engine below 335 m (1,100 ft.) ASL, otherwise severe engine damage can result.

© 02/25 ECHO Incorporated

1. Before adjusting carburetor clean or replace air filter and muffler spark arrester screen.
2. Make sure the bar and chain are properly adjusted.
3. Start engine and run several minutes to bring to operating temperature. Flash choke twice during warm-up to clear any air from the fuel system.
4. Stop engine. Turn “**H**” High Speed needle counterclockwise (CCW) to stop. Turn “**L**” Low Speed needle midway between full clockwise (CW) stop and CCW stop.
5. Idle Speed Adjustment:
   - Start engine, turn Idle speed adjustment screw “**T**” CW until the saw chain begins to move, then turn screw out CCW until the saw chain stops moving. Turn screw out, CCW, an additional 1/4 turn.

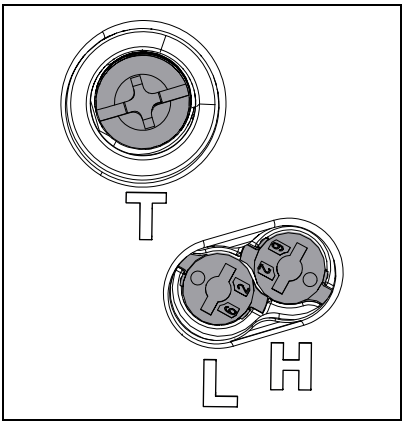

WARNING

When carburetor adjustment is completed, the saw chain should not move at idle, otherwise serious personal injury can result.

6. Accelerate to full throttle for two to three seconds to clear any excess fuel in the engine, then return to idle. Accelerate engine to full throttle to check for smooth transition from idle to high speed. If engine hesitates turn “**L**” needle CCW 1/8 turn and repeat acceleration. Continue adjustment until smooth acceleration results.
7. Check idle speed and adjust if necessary as described in item 5. If a tachometer is available idle speed should be set to value listed on specifications page.

CAUTION

When starting, idling adjustment speed should be adjusted to prevent the saw chain from moving. When you experience trouble with the carburetor, contact your dealer.

© 02/25 ECHO Incorporated

Setting the Saw Chain

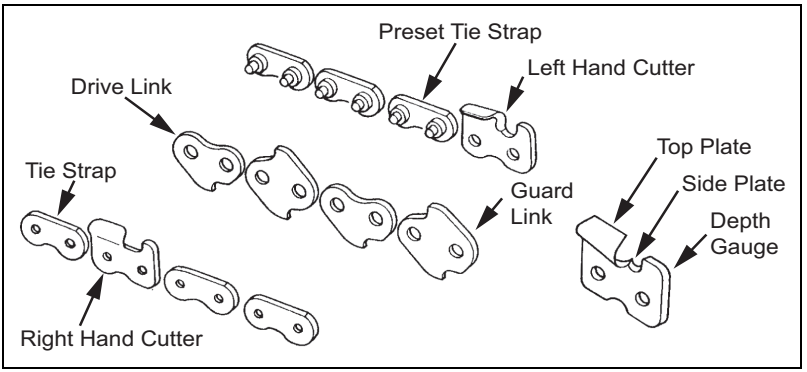

Important points for proper maintenance of saw chain:

- Keep the cutters sharp at all times.
- Keep the left and the right cutters properly aligned.
- Note that blunt or irregular cutters will result in poor cutting performance, increased vibration of chains and premature breakage of the saw chain.
- Drive link serves to remove sawdust from the groove of the guide bar. Keep the lower edge of the drive link sharp where indicated.

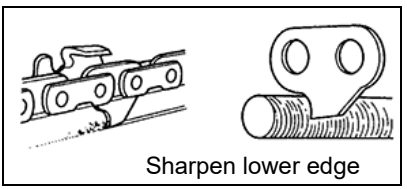

Setting the Saw Chain

- For setting saw chain, round file (7/32 in. diameter) and flat file are used.
- Push file as shown.
- To keep correct position and correct angle, use a file holder.

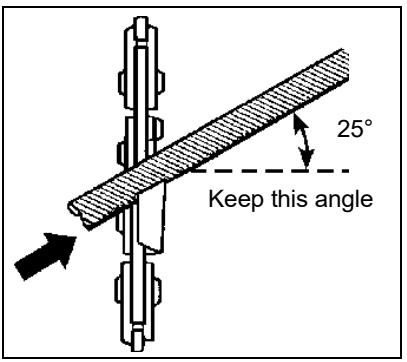

© 02/25 ECHO Incorporated

- Hold the file at a 10° angle from level.

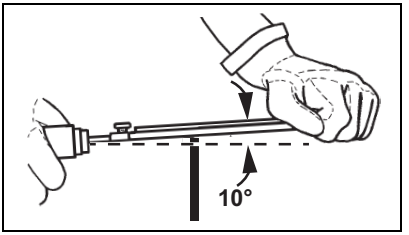

- Place the depth gauge tool firmly on guide bar so that depth gauge protrudes. Then file top of depth gauge with the flat file until flat with top of the depth gauge tool.

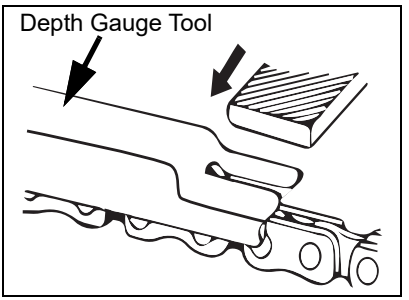

- Be sure 1/5th, or 20% of the file diameter remains above cutter edge.

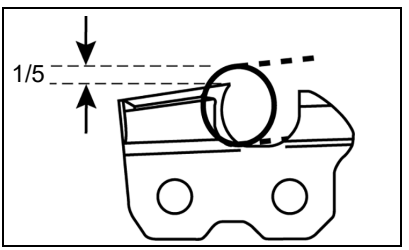

- Be sure to round off the front edge of the depth gauge.

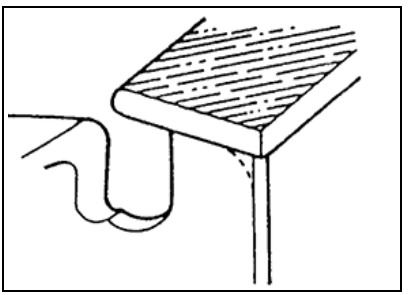

© 02/25 ECHO Incorporated

- Properly filed cutters are shown in illustration.
- When setting of the chain is finished, soak it in oil and wash away filings completely before using.
- When chain has been filed on the bar, supply sufficient oil to it, move the chain slowly to wash away the filings before using again.
- If the chainsaw is operated with filings clogged in the groove, the saw chain and the guide bar will be damaged prematurely.
- If the saw chain becomes soiled with resin, for instance, clean it with kerosene and soak in it oil.

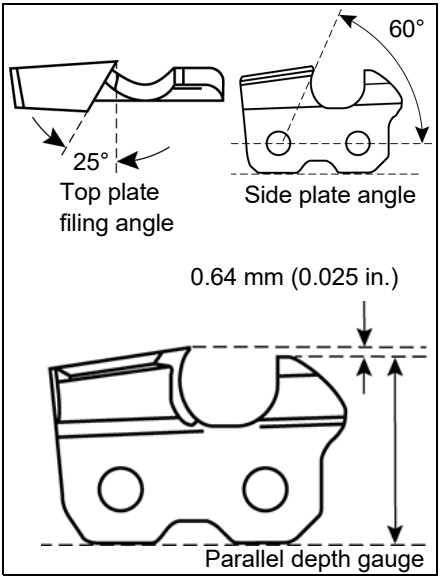

TROUBLESHOOTING

DANGER

Fuel vapors are flammable and can cause fire and/or explosion. Never test for ignition spark by grounding spark plug near cylinder plug hole, otherwise serious personal injury can result.

ENGINE PROBLEM TROUBLESHOOTING CHART				
Problem	**Check**	**Status**	**Cause**	**Remedy**
Engine starts hard. or Engine does not start.	Fuel at carburetor.	No fuel at carburetor.	Fuel filter or fuel line obstructed.	Clean or replace. See your dealer.
	Fuel at cylinder.	No fuel at cylinder.	Carburetor	See your dealer.

© 02/25 ECHO Incorporated

ENGINE PROBLEM TROUBLESHOOTING CHART				
Problem	**Check**	**Status**	**Cause**	**Remedy**
Engine starts hard. or Engine does not start.	Fuel at cylinder.	Muffler wet with fuel.	Fuel mixture too rich.	Open choke. Clean or replace air filter. Adjust carburetor. See your dealer.
	Spark at end of plug wire.	No spark.	Stop switch OFF. Electrical problem. Interlock switch.	Turn switch to ON. See your dealer.
	Spark at plug.		Incorrect gap. Covered with carbon. Fouled with fuel. Spark plug defective.	Adjust to 0.65 mm (0.026 in.). Clean or replace spark plug.
Engine runs, but dies. or Engine does not accelerate properly.	Air filter	Air filter dirty.	Normal wear.	Clean or replace.
	Fuel filter	Fuel filter dirty.	Contaminants or residue in fuel.	Replace filter or replace fuel.
	Fuel vent	Fuel vent plugged.	Contaminated fuel.	Clean or replace.
	Spark plug	Plug dirty or worn.	Normal wear.	Clean and adjust or replace.
	Carburetor	Improper adjustment.	Vibration	Adjust
	Cooling system	Cooling system dirty or plugged.	Extended operation in dirty or dusty locations.	Clean
	Spark arrester screen	Spark arrester screen plugged.	Normal wear.	Replace
Engine does not crank.	N/A		Internal engine problem.	See your dealer.

© 02/25 ECHO Incorporated

STORAGE

Storage After Use

WARNING

Units equipped with a momentary stop switch automatically return to RUN position. Engine can start unintentionally. Always remove spark plug lead from spark plug before assembling or performing maintenance procedures. Serious personal injury can result.

- Inspect and adjust every part of the chainsaw.
  - Completely clean every part and repair if necessary.
  - Apply thin coating of oil on metal parts to prevent rust.
- Remove chain and guide bar.
- Drain fuel tank completely. Press purge bulb six to seven times to remove remaining fuel from carburetor then drain the tank again. Close choke, start and run the engine until it stops due to lack of fuel.
- Allow engine to cool. Remove the spark plug lead from the spark plug. Remove the spark plug. Pour 7 cc (0.25 oz.) of fresh, clean, two-stroke engine oil into the cylinder through the spark plug hole.
- Store in a dry area, free from dust.

WARNING

Do not store in an enclosure where fuel fumes may accumulate or reach an open flame or spark.

CAUTION

Do not lend or rent your chainsaw without the Operator's Manual.

Note:

- For future reference, keep this Operator's Manual.
- If this Operator's Manual becomes illegible or is lost, contact your dealer, or go to www.echo-usa.com.

© 02/25 ECHO Incorporated

SPECIFICATIONS

MODEL	CS-590
Length	448 mm (17.6 in.)
Width	245 mm (9.6 in)
Height	292 mm (11.5 in.)
Weight - without fuel (without chain and guide bar)	6.0 kg (13.2 lb.)
Engine	Air-cooled two-stroke single cylinder
Displacement	59.8 mL (3.65 in.^{3})
Bore	45.0 mm (1.77 in.)
Stroke	37.6 mm (1.48 in.)
Compression Ratio	7.2:1
Carburetor	Diaphragm type
Spark Plug	NGK BPMR8Y Gap 0.65 mm (0.026 in.)
Fuel Tank Capacity	645 mL (21.8 US. fl. oz.)
Gasoline/Oil Ratio	50:1
Gasoline	Use 89 octane unleaded. Do not use fuel containing methyl alcohol, more than 10% ethyl alcohol or 15% MTBE. Do not use alternative fuels such as E-15 or E-85.
Oil	ISO-L-EGD (ISO/CD 13738) and JASO M345-FD two-stroke, air-cooled engine oil
Oiling System	Adjustable automatic oiler
Chain Oil Capacity	300 mL (10.2 US fl. oz.)
Starter System	Automatic rewind starter
Clutch	Centrifugal type
Sprocket Type	Spur type, 7-tooth, 3/8 in. pitch
Chain Brake	Manual and non-manual band brake type
Idle Speed	2,800 RPM

© 02/25 ECHO Incorporated

MODEL	CS-590
Clutch Engagement Speed	4,000 RPM
Wide Open Throttle Speed	12,500 RPM
Chain Tensioner	Side access system
Guide Bar	20 in., (optional 16, 18, 24, 27 in.)
Saw Chain	OREGON chain 72LPX (3/8 in. pitch)
Standard Features	Front hand guard, Rear hand guard, Anti-vibration device, Spiked bumper, Throttle control lockout, Chain catcher, Spark arrester muffler

© 02/25 ECHO Incorporated

PRODUCT REGISTRATION

Thank you for choosing Shindaiwa Power Equipment

Please go to http://www.shindaiwa-usa.com to register your new product on-line. It's ***FAST*** and ***EASY***! NOTE: your information will never be sold or misused by ECHO Incorporated. Registering your purchase enables us to contact you in the unlikely event of a service update or product recall, and verifies your ownership for warranty consideration.

If you do not have access to the Internet, you can complete the form below and mail to:

ECHO Incorporated, Product Registration, PO Box 1139,
Lake Zurich, IL 60047.

© 02/25 ECHO Incorporated

shindaiwa® PRODUCT REGISTRATION CARD : TARJETA DE REGISTRO : CARTE D'ENREGISTREMENT DU PRODUIT

ONLINE OPTION: Register online and save a stamp! You will be alerted of product updates and/or be sent new **Shindaiwa** product information and special offers. Simply go to: **www.shindaiwa-usa.com**

OPCIÓN POR INTERNET: ¡Registrese en la pagina web y ahorre una estampilla! Le alertarán sobre actualizaciones del producto y/o se le enviara información sobre los nuevos productos Shindaiwa y las ofertas especiales. Simplemente visite: **www.shindaiwa-usa.com**

OPTION EN LIGNE : Enregistrer en ligne et épargner un timbre! Vous serez informé sur les nouveaux produits Shindaiwa et les mises à jour de produit ainsi que les offres spéciales. Simplement visitez le: **www.shindaiwa-usa.com**

Please Print : Por Favor Enscriba Con Letra De Molde : En Lettre Carré S.V.P.

Confidential: Information provided will not be shared or sold

Purchaser's Name : Nombre del Comprador : Nom de l'acheteur

Address : Dirección : Adresse

City : Ciudad : Ville | *State : Estado : Province* | *Zip Code : Código Postal : Code Postal*

E-Mail Address : Dirección De Correo Electrónico : Courrier Électronique

Phone Number : Número De Teléfono : Téléphone | *Date of Purchase : Fecha de la Compra : Date de l'achat*

Where Purchased : Nombre del Almacén donde fue Comprado : Lieu d'achat

Model Number : Numero del Modelo : No. de modéle | *Serial Number : Numero de Serie : No. de série*

Registering your purchase enables us to contact you in the unlikely event of a service update or product recall and verifies your ownership in the event of loss. : El registrar su compra nos permite estar en contacto con usted en caso de cualquier evento como el aviso de tiempo de servicio o la revocación del producto y verificación de propiedad en caso de robo o pérdida. : L'enregistrement de votre achat nous permettra de vous contacter dans le cas improbable de modifications des instructions d'entretien ou de rappel du produit et vérifier que vous êtes le propriétaire en cas de vol ou de perte.

Primary use of tool: ☐ Professional ☐ Homeowner ☐ Rental Equip.
Uso primario de la herramienta: ☐ Profesional ☐ Dueño de casa ☐ Alquiler
Usage principal : ☐ Professionnel ☐ Residential ☐ Location

Do you wish to receive periodic Shindaiwa product information and special offers by e-mail? ☐ Yes ☐ No
¿Desea usted recibir información periódica y ofertas especiales por correo electronico sobre el producto Shindaiwa? ☐ Yes ☐ No
Souhaitez-vous recevoir périodiquement de l'information sur les produits Shindaiwa et les offres spéciales par courrier électronique ? ☐ Oui ☐ Non

Did you visit the Shindaiwa website before purchasing your product?
☐ Yes ☐ No
Visitó usted la pagina web Shindaiwa antes de comprar su producto?
☐ Sí ☐ No
Avez-vous visité le site d'Shindaiwa avant de procurer votre produit?
☐ Oui ☐ Non

What factor(s) most influenced your purchase?
☐ Performance ☐ Price ☐ Dealer
☐ Reliability ☐ Prior Experience ☐ Quality
☐ Friend/Family ☐ Brand ☐ Warranty

¿Qué factor(es) influenció más en su compra?
☐ Funcionamiento ☐ Precio ☐ Distribuidor
☐ Confiabilidad ☐ Experiencia Anterior ☐ Calidad
☐ Amigo/Familia ☐ Marca ☐ Garantía

Quel facteur (facteurs) vous a influencé le plus?
☐ Performance ☐ Prix ☐ Marchand
☐ Fiabilité ☐ Expérience ☐ Qualité
☐ Ami/Famille ☐ Marque ☐ Garantie

1.877.986.7783 **www.shindaiwa-usa.com** **X7571120102 02-2012**

NOTES

© 02/25 ECHO Incorporated

© 02/25 ECHO Incorporated

C98613001001 - C98613999999

ECHO INCORPORATED
400 Oakwood Road
Lake Zurich, IL 60047
www.echo-usa.com